1. ALL RESISTANCE VALUES ARE IN OHMS, 0.1 WATT +/- 5%.
2. ALL CAPACITANCE VALUES ARE IN MICROFARADS.
3. ALL CRYSTALS & OSCILLATOR VALUES ARE IN HERTZ.

REV	ZONE	ECN	DESCRIPTION OF CHANGE	CK APPD / DATE	ENG APPD / DATE
A		554161	PRODUCTION RELEASED	12/18/07	?

SCHEM,LIO,M87,MBP15
12/18/07
PVT

PDF PAGE	CSA PAGE	CONTENTS	SYNC MASTER	DATE
1	1	Table of Contents		
2	2	Block Diagram		
3	4	BOM Configuration	(Master)	(Master)
4	9	Aliases	(Master)	(Master)
5	34	PCI-E MiniCard Connector	(Master)	(Master)
6	35	ExpressCard Connector	(Master)	(Master)
7	36	MLB I/O Board Connector	(Master)	(Master)
8	46	Left USB Port	(Master)	(Master)
9	57	Current & Thermal Sensors	(Master)	(Master)
10	62	AUDIO:CODEC	LENGO_M87_AUDIO	11/01/2007
11	65	AUDIO: HEADPHONE AMP	LENGO_M87_AUDIO	11/01/2007
12	66	AUDIO:SPEAKER AMP	LENGO_M87_AUDIO	11/01/2007
13	67	AUDIO: JACKS	LENGO_M87_AUDIO	11/01/2007
14	68	AUDIO: JACK TRANSLATORS	LENGO_M87_AUDIO	11/01/2007
15	69	DC-In & Battery Connectors	(Master)	(Master)
16	76	5V/3.3V SUPPLY	<MASTER>	<MASTER>
17	79	PBus Supply & Batt. Charger	(Master)	(Master)
18	90	Inverter Connector	SPLIT_INVERTER	12/06/2006
19	98	LCD Backlight Support	M88_MLB	07/05/2007
20	99	Cross Reference Page		
21	100	Cross Reference Page		
22	101	Cross Reference Page		
23	102	Cross Reference Page		

PART#	QTY	DESCRIPTION	REFERENCE DESIGNATOR(S)	CRITICAL	BOM OPTION
051-7447	1	SCHEM,DUBLIN,M87	SCH1	CRITICAL	
820-2273	1	PCBF,DUBLIN,M87	PCB1	CRITICAL	

DIMENSIONS ARE IN MILLIMETERS
XX ±
X.XX ±
X.XXX ±
ANGLES ±

DO NOT SCALE DRAWING

THIRD ANGLE PROJECTION

METRIC

DRAFTER		DESIGN CK	
ENG APPD		MFG APPD	
QA APPD		DESIGNER	
RELEASE		SCALE NONE	

MATERIAL/FINISH NOTED AS APPLICABLE

SIZE D

APPLE INC.

NOTICE OF PROPRIETARY PROPERTY

THE INFORMATION CONTAINED HEREIN IS THE PROPRIETARY PROPERTY OF APPLE COMPUTER, INC. THE POSSESSOR AGREES TO THE FOLLOWING

I TO MAINTAIN THE DOCUMENT IN CONFIDENCE
II NOT TO REPRODUCE OR COPY IT
III NOT TO REVEAL OR PUBLISH IN WHOLE OR PART

TITLE
SCHEM,DUBLIN,M87

DRAWING NUMBER 051-7447 REV. A

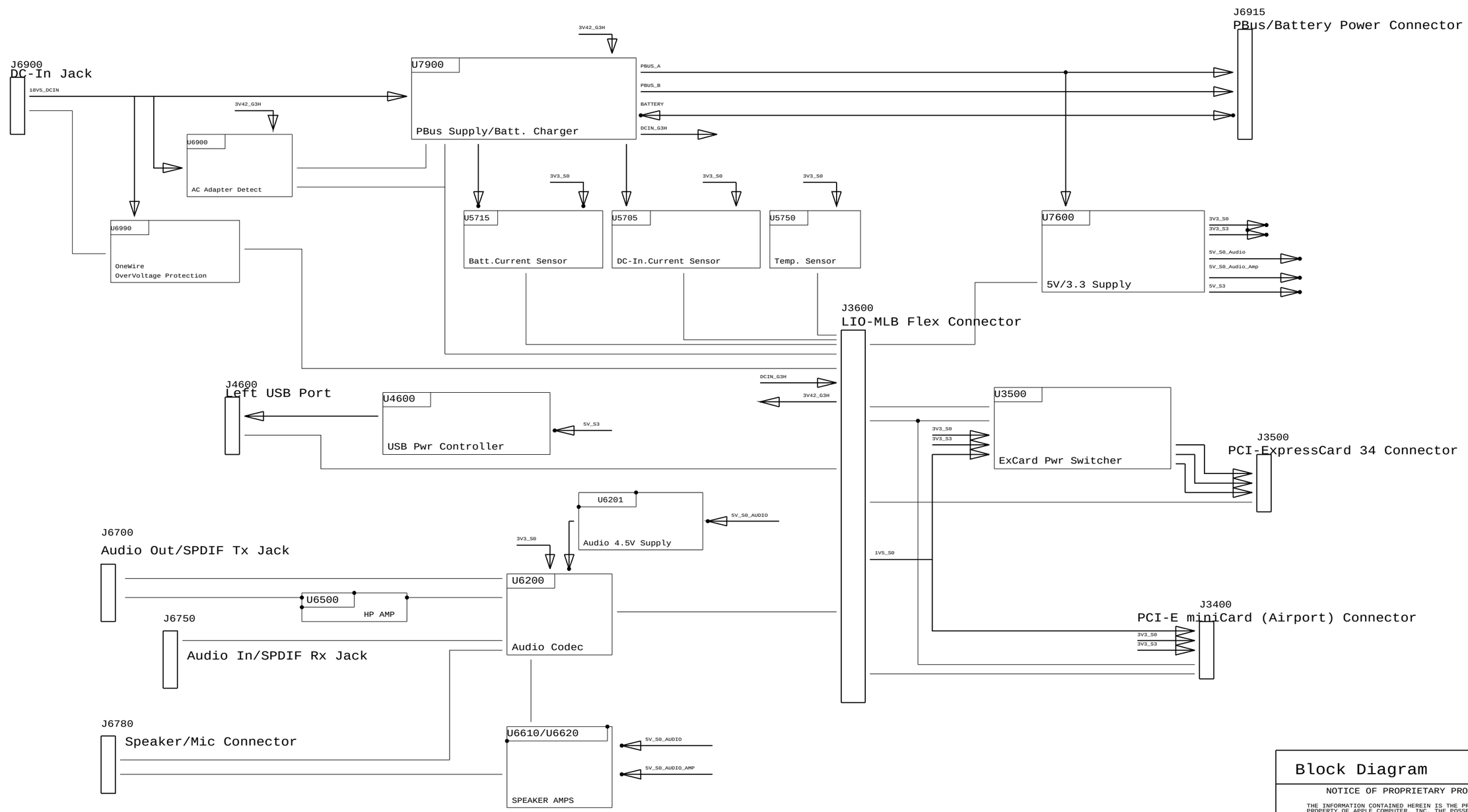

Block Diagram

NOTICE OF PROPRIETARY PROPERTY

THE INFORMATION CONTAINED HEREIN IS THE PROPRIETARY PROPERTY OF APPLE COMPUTER, INC. THE POSSESSOR AGREES TO THE FOLLOWING

I TO MAINTAIN THE DOCUMENT IN CONFIDENCE

II NOT TO REPRODUCE OR COPY IT

III NOT TO REVEAL OR PUBLISH IN WHOLE OR PART

APPLE INC.

SIZE	DRAWING NUMBER	REV.
D	051-7447	A
SCALE NONE	SHT 2 OF 102	

BOM NUMBER	BOM NAME	BOM OPTIONS
630-9094	PCBA,DUBLIN,M87	ALTERNATE,COMMON,M87_COMMON,EEE_Z3M

BOM GROUP	BOM OPTIONS
M87_COMMON	BKLT_3V_SIG,COMBOJACK

Bar Code Label / EEE #’s

PART NUMBER	QTY	DESCRIPTION	REFERENCE DES	CRITICAL	BOM OPTION
000-0041	1	PLACEHOLDER FOR EEE/CCC INFO	[EEE:Z3M]	CRITICAL	EEE_Z3M

Alternate Parts

PART NUMBER	ALTERNATE FOR PART NUMBER	BOM OPTION	REF DES	COMMENTS:
376S0448	376S0445		ALL	SI7806ADN for FSM6296
128S0081	128S0061		ALL	150uF,6.3V,25MOHM,C2
128S0093	128S0092		ALL	33UF,16V,45MOHM,D2E
353S1717	353S1297		ALL	LM397,COMPARATOR
376S0560	376S0532		ALL	SI7999DN for SI7913DN

BOM Configuration

SYNC_MASTER=(Master) SYNC_DATE=(Master)

NOTICE OF PROPRIETARY PROPERTY

THE INFORMATION CONTAINED HEREIN IS THE PROPRIETARY PROPERTY OF APPLE COMPUTER, INC. THE POSSESSOR AGREES TO THE FOLLOWING

I TO MAINTAIN THE DOCUMENT IN CONFIDENCE

II NOT TO REPRODUCE OR COPY IT

III NOT TO REVEAL OR PUBLISH IN WHOLE OR PART

APPLE INC.

SIZE	DRAWING NUMBER	REV.
D	051-7447	A
SCALE NONE	SHT 4 OF 102	

POWER & GROUNDS

15 =PPDCIN_G3H_LIO_CONN
17 =PPVBATT_G3H_LIO_CONN
PPDCIN_G3H
MAKE_BASE=TRUE
VOLTAGE=18.5V
MIN_LINE_WIDTH=0.5mm
MIN_NECK_WIDTH=0.20mm
=PPDCIN_G3H 7

15 =PP18V5_G3H_INRUSH
PP18V5_G3H_CHGR
MAKE_BASE=TRUE
VOLTAGE=18.5V
MIN_LINE_WIDTH=0.60mm
MIN_NECK_WIDTH=0.20mm
=PP18V5_G3H_CHGR 17

17 =PPVBAT_G3H_CHGR_REG
PPVBAT_G3H_CHGR_REG
MAKE_BASE=TRUE
VOLTAGE=12.6V
MIN_LINE_WIDTH=0.4 mm
MIN_NECK_WIDTH=0.25 mm
=PPBUS_G3H_LIO_CONN 15
=PPVIN_5V3V3 16
=PPBUS_S0_LCDBKLT 19

16 7 =PP3V42_G3H
PP3V42_G3H
MAKE_BASE=TRUE
VOLTAGE=3.42V
MIN_LINE_WIDTH=0.5mm
MIN_NECK_WIDTH=0.20mm
=PP3V42_G3H_ACIN 15 17

7 =PP1V5_S0
PP1V5_S0
MAKE_BASE=TRUE
VOLTAGE=1.5V
MIN_LINE_WIDTH=0.5mm
MIN_NECK_WIDTH=0.20mm
=PP1V5_S0_MINI 5
=PP1V5_S0_EXCARD 6

16 =PP3V3_S3_REG
PP3V3_S3_LIO
MAKE_BASE=TRUE
VOLTAGE=3.3V
MIN_LINE_WIDTH=0.50mm
MIN_NECK_WIDTH=0.20mm
=PP3V3_S3_MINI 5
=PP3V3_S3_EXCARD 6

16 =PP3V3_S0_FET
PP3V3_S0_LIO
MAKE_BASE=TRUE
VOLTAGE=3.3V
MIN_LINE_WIDTH=0.30MM
MIN_NECK_WIDTH=0.20MM
=PP3V3_S0_AUDIO 10 13 14
=PP3V3_S0_PBATTISENS 9
=PP3V3_S0_PDCISENS 9
=PP3V3_S0_TMPSNSR 9
=PP3V3_S0_EXCARD 6
=PP3V3_S0_LCDBKLT 19

16 =PP5V_S3_REG
PP5V_S3_LIO
MAKE_BASE=TRUE
VOLTAGE=5V
MIN_LINE_WIDTH=0.5mm
MIN_NECK_WIDTH=0.2mm
=PP5V_S3_LTUSB 8
=PP5V_S3_LIO 16

16 =PP5V_S0_FET
PP5V_S0_FET
MAKE_BASE=TRUE
VOLTAGE=5V
MIN_LINE_WIDTH=0.50 MM
MIN_NECK_WIDTH=0.25 MM
=PP5V_S0_LCDBKLT 19
=BKLT_PPBUS_S0_LCDBKLT_EN

16 =PP5V_S0_AUDIO_XW
PP5V_S0_AUDIO
MAKE_BASE=TRUE
VOLTAGE=5V
MIN_LINE_WIDTH=0.30 MM
MIN_NECK_WIDTH=0.20 MM
=PP5V_S0_AUDIO 10 11

16 =PP5V_S0_AUDIO_AMP_XW
PP5V_S0_AUDIO_AMP
MAKE_BASE=TRUE
VOLTAGE=5V
MIN_LINE_WIDTH=0.60 MM
MIN_NECK_WIDTH=0.10 MM
=PP5V_S0_AUDIO_AMP 12

16 13 12 =GND_AUDIO_AMP
GND_AUDIO_AMP
MAKE_BASE=TRUE
VOLTAGE=0V
MIN_LINE_WIDTH=0.50mm
MIN_NECK_WIDTH=0.20mm

=GND_AUDIO
GND_AUDIO
MAKE_BASE=TRUE
VOLTAGE=0V
GND_AUDIO_CODEC 10 11 12 13 14 16

ZT0920
3P2R2P7
1 CHASSIS_GND1
MAKE_BASE=TRUE
VOLTAGE=0V
MIN_LINE_WIDTH=0.50mm
MIN_NECK_WIDTH=0.20mm
=GND_CHASSIS_AUDIO_JACK 13

ZT0930
3P2R2P7
1

CHASSIS_GND2
MAKE_BASE=TRUE
VOLTAGE=0V
MIN_LINE_WIDTH=0.50mm
MIN_NECK_WIDTH=0.20mm
=GND_CHASSIS_AUDIO_MIC 14

CHASSIS_GND3
MAKE_BASE=TRUE
VOLTAGE=0V
MIN_LINE_WIDTH=0.50mm
MIN_NECK_WIDTH=0.20mm
=GND_CHASSIS_DCIN_JACK 15

CHASSIS_GND4
MAKE_BASE=TRUE
VOLTAGE=0V
MIN_LINE_WIDTH=0.50mm
MIN_NECK_WIDTH=0.20mm
=GND_CHASSIS_BOTTOM 10 13

ZT0910
3P2R2P7
1
GND
VOLTAGE=0V
MIN_LINE_WIDTH=0.50mm
MIN_NECK_WIDTH=0.20mm

PCI-E EXPRESS CARD 34

7 6 USB2_EXCARD_P
NET_PHYSICAL_TYPE=USB
NET_SPACING_TYPE=USB
MAX_EXPOSED_LENGTH=6MM
1207

7 6 USB2_EXCARD_N
NET_PHYSICAL_TYPE=USB
NET_SPACING_TYPE=USB
MAX_EXPOSED_LENGTH=6MM
1208

7 6 PCIE_CLK100M_EXCARD_P
NET_PHYSICAL_TYPE=PCIE
NET_SPACING_TYPE=PCIE
MAX_EXPOSED_LENGTH=6MM
1222

7 6 PCIE_CLK100M_EXCARD_N
NET_PHYSICAL_TYPE=PCIE
NET_SPACING_TYPE=PCIE
MAX_EXPOSED_LENGTH=6MM
1223

7 PCIE_CLK100M_EXCARD_UF_P
NET_PHYSICAL_TYPE=PCIE
NET_SPACING_TYPE=PCIE
MAX_EXPOSED_LENGTH=6MM
1231

7 PCIE_CLK100M_EXCARD_UF_N
NET_PHYSICAL_TYPE=PCIE
NET_SPACING_TYPE=PCIE
MAX_EXPOSED_LENGTH=6MM
1232

7 6 PCIE_EXCARD_D2R_P
NET_PHYSICAL_TYPE=PCIE
NET_SPACING_TYPE=PCIE
MAX_EXPOSED_LENGTH=6MM
1216

7 6 PCIE_EXCARD_D2R_N
NET_PHYSICAL_TYPE=PCIE
NET_SPACING_TYPE=PCIE
MAX_EXPOSED_LENGTH=6MM
1217

7 6 PCIE_EXCARD_R2D_P
NET_PHYSICAL_TYPE=PCIE
NET_SPACING_TYPE=PCIE
MAX_EXPOSED_LENGTH=6MM
1218

7 6 PCIE_EXCARD_R2D_N
NET_PHYSICAL_TYPE=PCIE
NET_SPACING_TYPE=PCIE
MAX_EXPOSED_LENGTH=6MM
1219

7 6 EXCARD_CLKREQ_L
1224

7 6 EXCARD_OC_L
1226

7 PCIE_WAKE_L
MAKE_BASE=TRUE
PCIE_WAKE_EXCARD_L 6
PCIE_WAKE_MINI_L 5

PCI-E MINICARD

7 5 PCIE_MINI_R2D_P
NET_PHYSICAL_TYPE=PCIE
NET_SPACING_TYPE=PCIE
MAX_EXPOSED_LENGTH=6MM
1214

7 5 PCIE_MINI_R2D_N
NET_PHYSICAL_TYPE=PCIE
NET_SPACING_TYPE=PCIE
MAX_EXPOSED_LENGTH=6MM
1215

7 5 PCIE_MINI_D2R_P
NET_PHYSICAL_TYPE=PCIE
NET_SPACING_TYPE=PCIE
MAX_EXPOSED_LENGTH=6MM
1211

7 5 PCIE_MINI_D2R_N
NET_PHYSICAL_TYPE=PCIE
NET_SPACING_TYPE=PCIE
MAX_EXPOSED_LENGTH=6MM
1212

7 5 PCIE_CLK100M_MINI_P
NET_PHYSICAL_TYPE=PCIE
NET_SPACING_TYPE=PCIE
MAX_EXPOSED_LENGTH=6MM
1209

7 5 PCIE_CLK100M_MINI_N
NET_PHYSICAL_TYPE=PCIE
NET_SPACING_TYPE=PCIE
MAX_EXPOSED_LENGTH=6MM
1210

7 PCIE_CLK100M_MINI_UF_P
NET_PHYSICAL_TYPE=PCIE
NET_SPACING_TYPE=PCIE
MAX_EXPOSED_LENGTH=6MM
1230

7 PCIE_CLK100M_MINI_UF_N
NET_PHYSICAL_TYPE=PCIE
NET_SPACING_TYPE=PCIE
MAX_EXPOSED_LENGTH=6MM
1233

7 5 USB2_MINI_P
NET_PHYSICAL_TYPE=USB
NET_SPACING_TYPE=USB
MAX_EXPOSED_LENGTH=6MM
1238

7 5 USB2_MINI_N
NET_PHYSICAL_TYPE=USB
NET_SPACING_TYPE=USB
MAX_EXPOSED_LENGTH=6MM
1239

7 5 MINI_CLKREQ_L
1225

USB

7 USB2_LT_P
MAKE_BASE=TRUE
NET_PHYSICAL_TYPE=USB
NET_SPACING_TYPE=USB
LEFT_USB_P 8
MAX_EXPOSED_LENGTH=6MM

7 USB2_LT_N
MAKE_BASE=TRUE
NET_PHYSICAL_TYPE=USB
NET_SPACING_TYPE=USB
LEFT_USB_N 8
MAX_EXPOSED_LENGTH=6MM

7 LTUSB_OC_L
MAKE_BASE=TRUE
LEFT_USB_OC_L 8

SMBUS

7 SMBUS_SMC_SCL
MAKE_BASE=TRUE
=SMBUS_TMPSNSR_SCL 9
=SMBUS_MINI_SCL 5
MAKE_BASE=TRUE

7 SMBUS_SMC_SDA
MAKE_BASE=TRUE
=SMBUS_TMPSNSR_SDA 9
=SMBUS_MINI_SDA 5
MAKE_BASE=TRUE

7 SMBUS_SB_SCL
MAKE_BASE=TRUE
=SMBUS_EXCARD_SCL 6

7 SMBUS_SB_SDA
MAKE_BASE=TRUE
=SMBUS_EXCARD_SDA 6

POWER MANAGEMENT

7 LIO_S3_EN
MAKE_BASE=TRUE
=S3_REG_EN 16

7 PM_SLP_S3_LS5V
MAKE_BASE=TRUE
=LIO_P3V3S0_EN_L 16
=LIO_P5VS0_EN_L 16

BATTERY

ZT0900
3P2R2P7

15 =PPBATTPOS_G3H_LIO_CONN
BATT_POS
MAKE_BASE=TRUE
MIN_LINE_WIDTH=0.6mm
MIN_NECK_WIDTH=0.25mm
=BATT_POS 17

15 =PPBATTNEG_G3H_LIO_CONN
=BATT_NEG IS ALIASED TO GND ON PAGE 15
THEREFORE CONSTRAINTS HAVE BEEN REMOVED.
=BATT_NEG 17

Backlight

19 =BKLT_EN
LCDBKLT_PWREN 7
MAKE_BASE=TRUE

19 =BKLT_PLT_RST_L
PLT_RESET_L 5 6 7
MAKE_BASE=TRUE

19 =BKLT_PWM
LCDBKLT_PWM_UNBUF 7
MAKE_BASE=TRUE

Aliases

SYNC_MASTER=(Master) SYNC_DATE=(Master)

NOTICE OF PROPRIETARY PROPERTY

THE INFORMATION CONTAINED HEREIN IS THE PROPRIETARY PROPERTY OF APPLE COMPUTER, INC. THE POSSESSOR AGREES TO THE FOLLOWING

I TO MAINTAIN THE DOCUMENT IN CONFIDENCE
II NOT TO REPRODUCE OR COPY IT
III NOT TO REVEAL OR PUBLISH IN WHOLE OR PART

APPLE INC.

SIZE	DRAWING NUMBER	REV.
D	051-7447	A
SCALE NONE	SHT 9 OF 102	

PCI-EXPRESS MINI CARD CONNECTOR

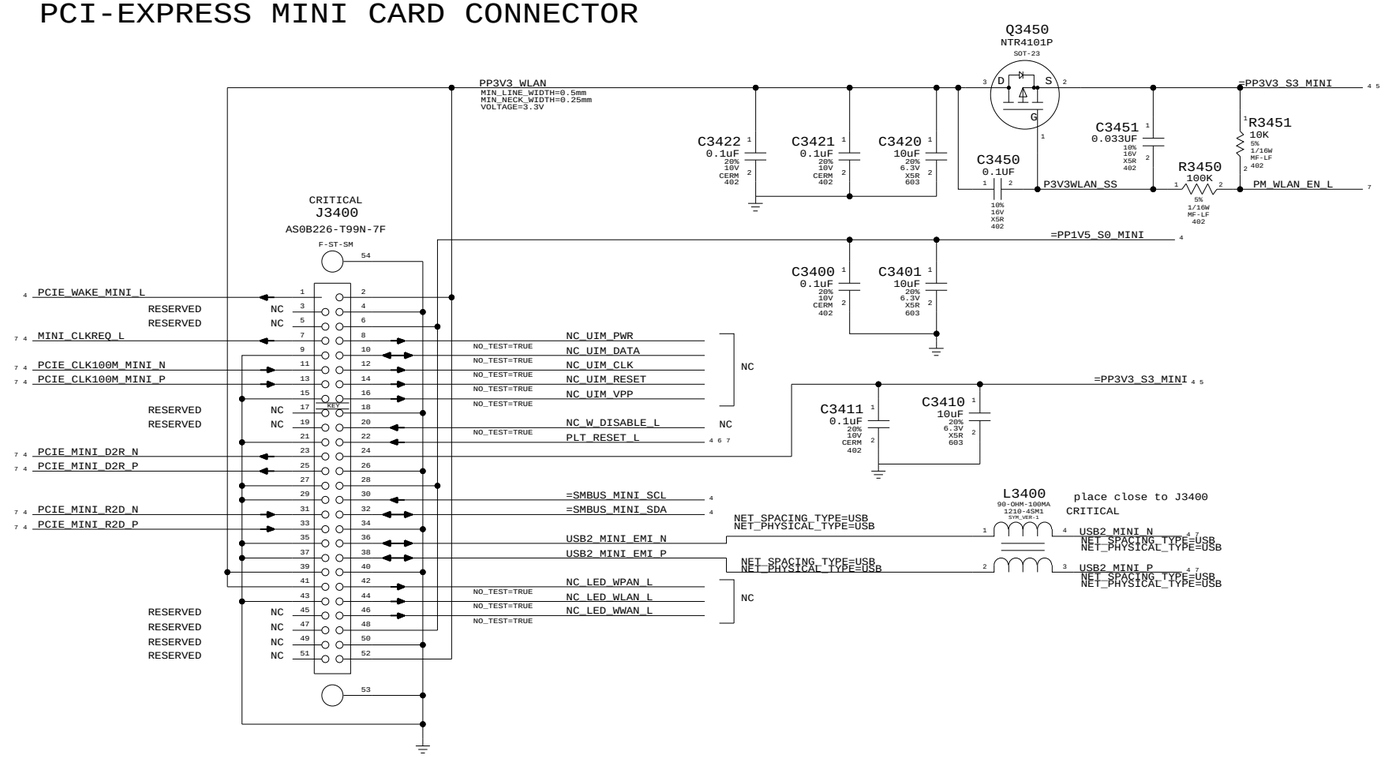

PCI-E MiniCard Connector

SYNC_MASTER=(Master) SYNC_DATE=(Master)

NOTICE OF PROPRIETARY PROPERTY

THE INFORMATION CONTAINED HEREIN IS THE PROPRIETARY PROPERTY OF APPLE COMPUTER, INC. THE POSSESSOR AGREES TO THE FOLLOWING

I TO MAINTAIN THE DOCUMENT IN CONFIDENCE

II NOT TO REPRODUCE OR COPY IT

III NOT TO REVEAL OR PUBLISH IN WHOLE OR PART

APPLE INC.

SIZE	DRAWING NUMBER	REV.
D	051-7447	A
SCALE NONE	SHT 34	OF 102

EXPRESSCARD/34 TOP MOUNT CONNECTOR

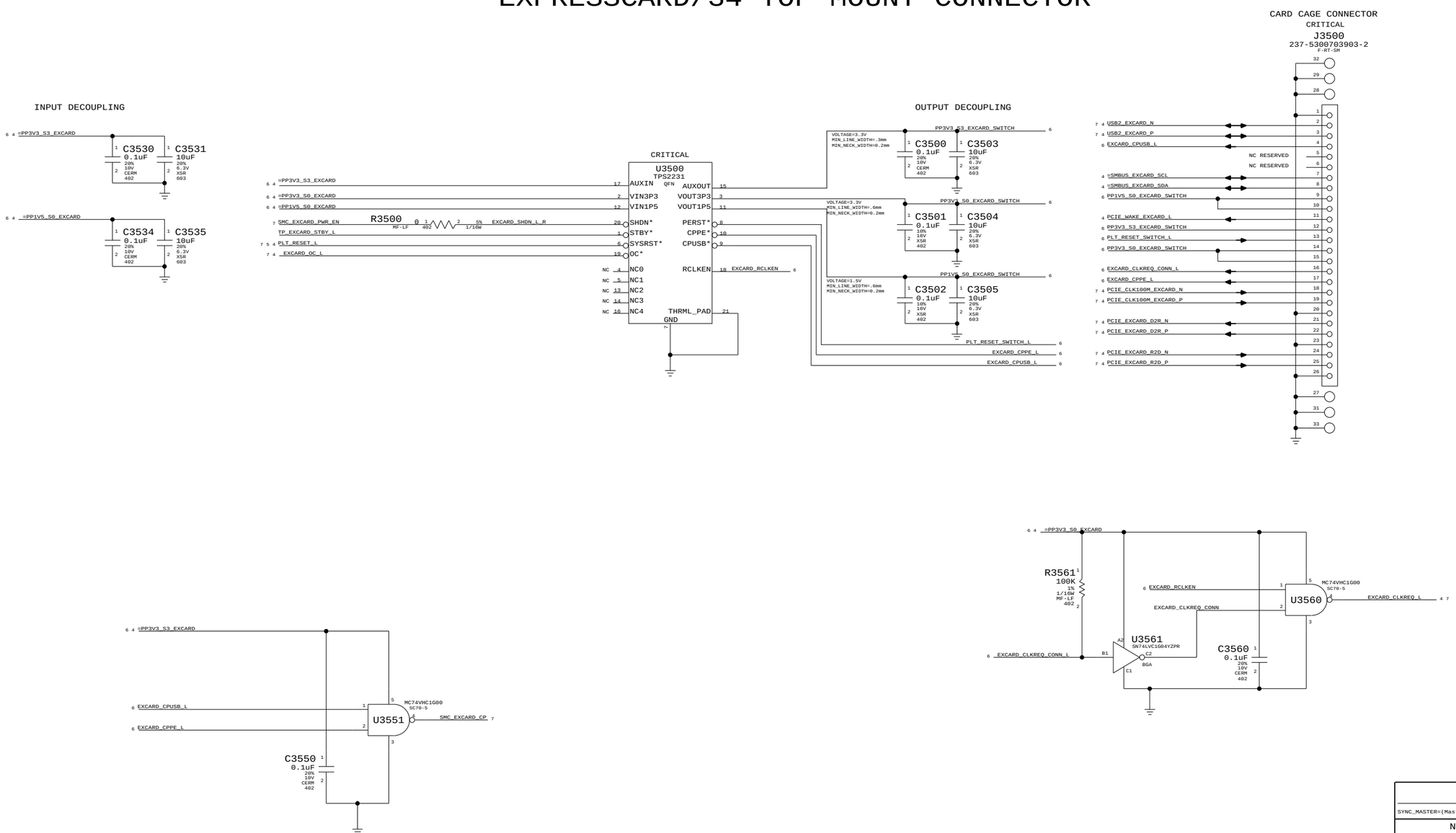

ExpressCard Connector

SYNC_MASTER=(Master) SYNC_DATE=(Master)

NOTICE OF PROPRIETARY PROPERTY

THE INFORMATION CONTAINED HEREIN IS THE PROPRIETARY PROPERTY OF APPLE COMPUTER, INC. THE POSSESSOR AGREES TO THE FOLLOWING

I TO MAINTAIN THE DOCUMENT IN CONFIDENCE

II NOT TO REPRODUCE OR COPY IT

III NOT TO REVEAL OR PUBLISH IN WHOLE OR PART

APPLE INC.

SIZE	DRAWING NUMBER	REV.
D	051-7447	A
SCALE NONE	SHT 35	OF 102

Left I/O Board Connector

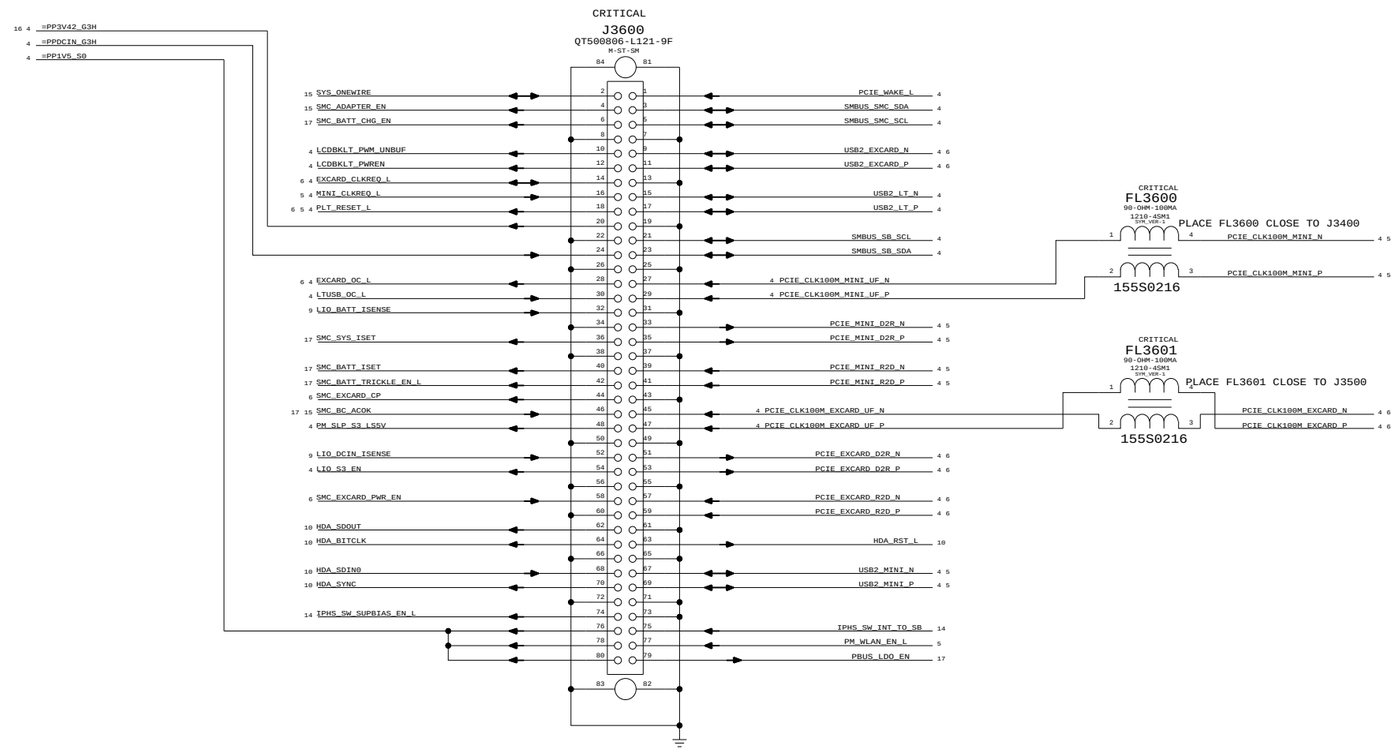

MLB I/O Board Connector

SYNC_MASTER=(Master) SYNC_DATE=(Master)

NOTICE OF PROPRIETARY PROPERTY

THE INFORMATION CONTAINED HEREIN IS THE PROPRIETARY PROPERTY OF APPLE COMPUTER, INC. THE POSSESSOR AGREES TO THE FOLLOWING

I TO MAINTAIN THE DOCUMENT IN CONFIDENCE

II NOT TO REPRODUCE OR COPY IT

III NOT TO REVEAL OR PUBLISH IN WHOLE OR PART

APPLE INC.

SIZE	DRAWING NUMBER	REV.
D	051-7447	A
SCALE NONE	SHT 36 OF 102	

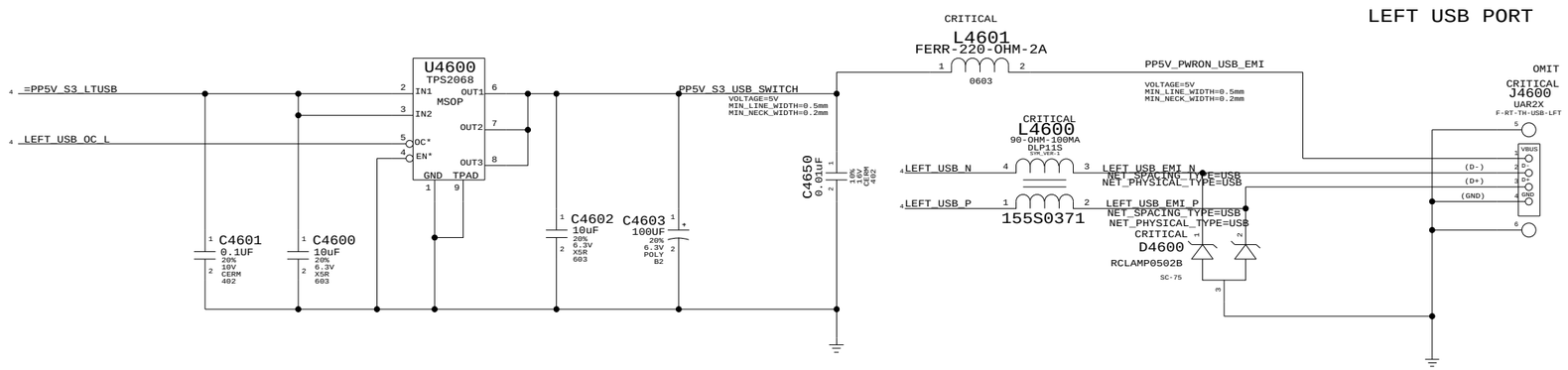

PUT L4600, L4601, ACROSS THE MOAT

PART#	QTY	DESCRIPTION	REFERENCE DESIGNATOR(S)	CRITICAL	BOM OPTION
514-0472	1	New USB port with rear shield	J4600	CRITICAL	

Left USB Port

SYNC_MASTER=(Master) SYNC_DATE=(Master)

NOTICE OF PROPRIETARY PROPERTY

THE INFORMATION CONTAINED HEREIN IS THE PROPRIETARY PROPERTY OF APPLE COMPUTER, INC. THE POSSESSOR AGREES TO THE FOLLOWING

I TO MAINTAIN THE DOCUMENT IN CONFIDENCE

II NOT TO REPRODUCE OR COPY IT

III NOT TO REVEAL OR PUBLISH IN WHOLE OR PART

APPLE INC.

SIZE	DRAWING NUMBER	REV.
D	051-7447	A

SCALE NONE SHT 46 OF 102

Battery Current Sense

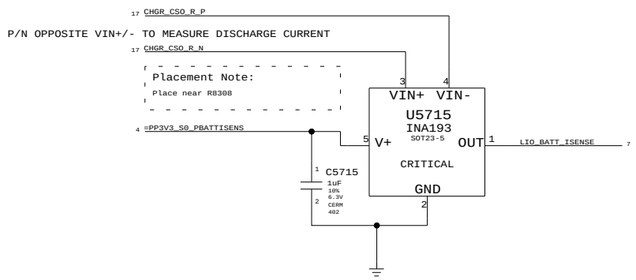

DCIn Current Sense

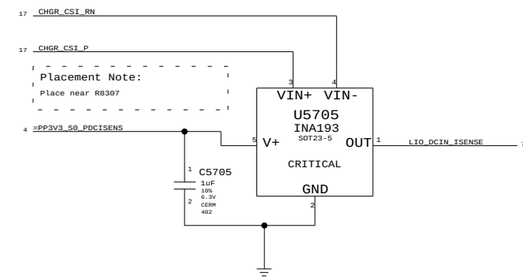

Battery Charger Thermal Sensor

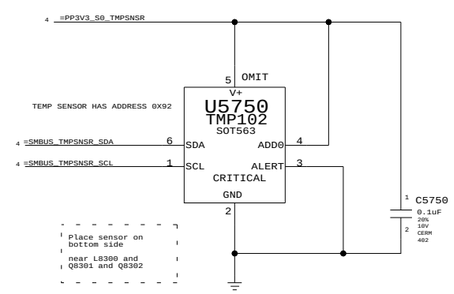

PART#	QTY	DESCRIPTION	REFERENCE DESIGNATOR(S)	CRITICAL	BOM OPTION
353S2039	1	revE of TMP102	U5750	CRITICAL	

PART NUMBER	ALTERNATE FOR PART NUMBER	BOM OPTION	REF DES	COMMENTS:
353S1807	353S2039		U5750	Alternate old version

Current & Thermal Sensors

SYNC_MASTER=(Master) SYNC_DATE=(Master)

NOTICE OF PROPRIETARY PROPERTY

THE INFORMATION CONTAINED HEREIN IS THE PROPRIETARY PROPERTY OF APPLE COMPUTER, INC. THE POSSESSOR AGREES TO THE FOLLOWING

I TO MAINTAIN THE DOCUMENT IN CONFIDENCE

II NOT TO REPRODUCE OR COPY IT

III NOT TO REVEAL OR PUBLISH IN WHOLE OR PART

APPLE INC.

SIZE	DRAWING NUMBER	REV.
D	051-7447	A

SCALE NONE SHT 57 OF 102

AUDIO CODEC

APPLE P/N 353S1527

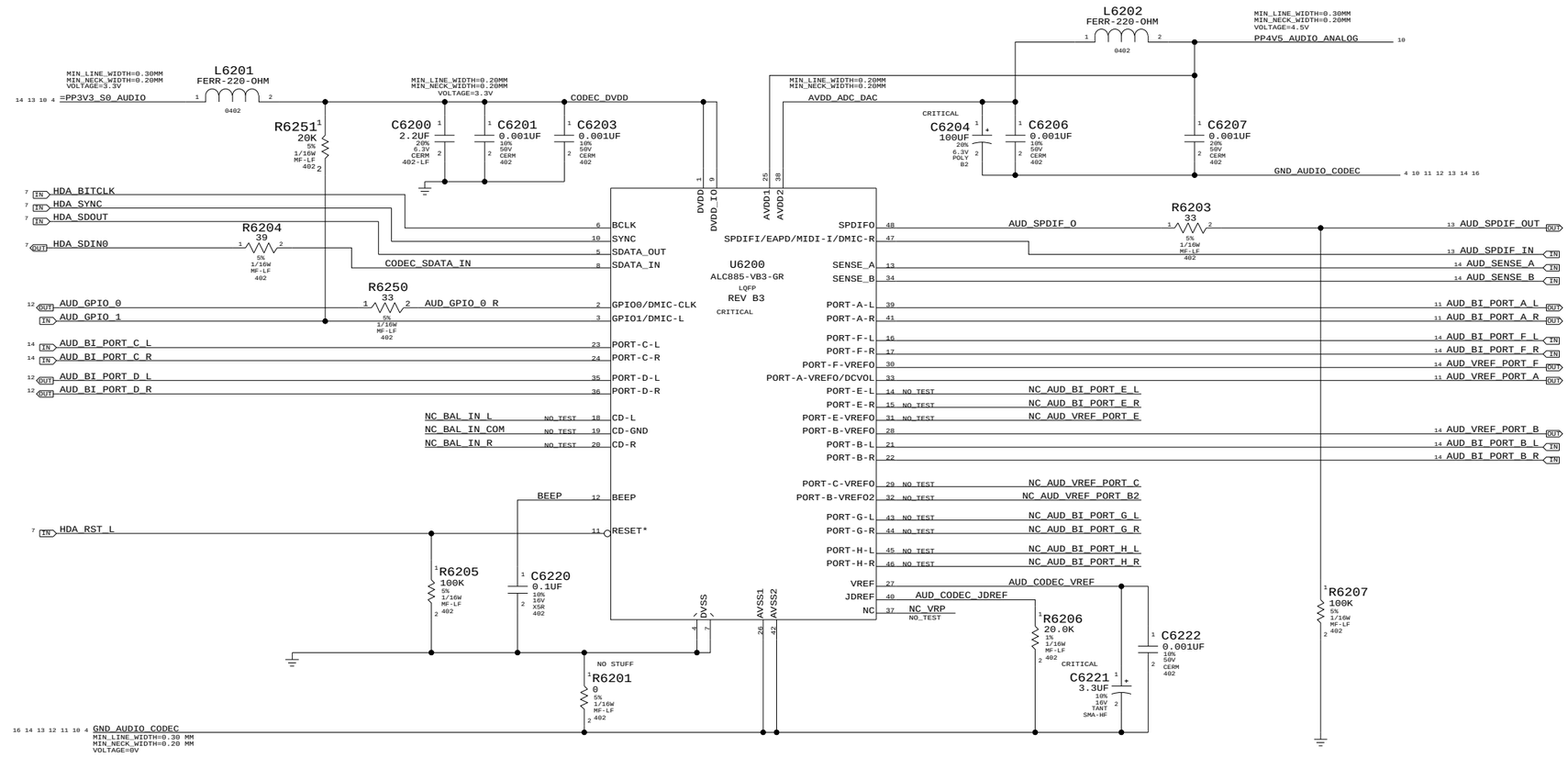

AUDIO 4.5V REGULATOR

APPLE P/N 353S1576

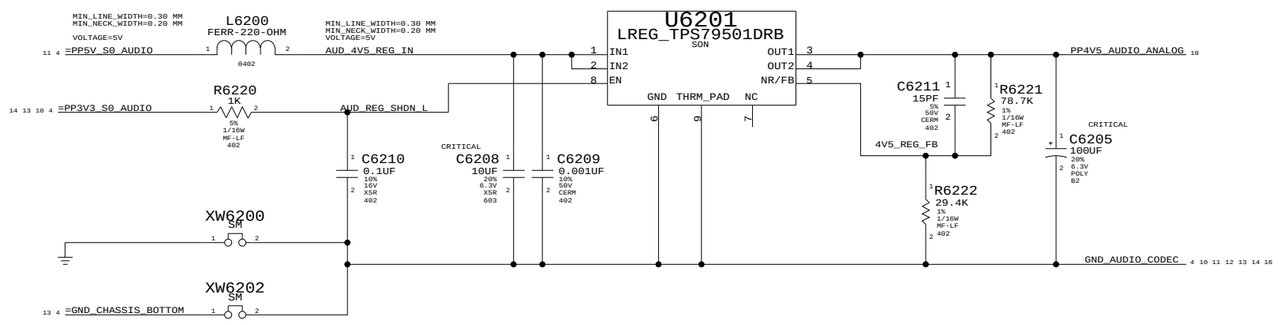

AUDIO:CODEC

SYNC_MASTER=LENGO_M87_AUDIO SYNC_DATE=11/01/2007

NOTICE OF PROPRIETARY PROPERTY

THE INFORMATION CONTAINED HEREIN IS THE PROPRIETARY PROPERTY OF APPLE COMPUTER, INC. THE POSSESSOR AGREES TO THE FOLLOWING

I TO MAINTAIN THE DOCUMENT IN CONFIDENCE

II NOT TO REPRODUCE OR COPY IT

III NOT TO REVEAL OR PUBLISH IN WHOLE OR PART

APPLE INC.

SIZE	DRAWING NUMBER	REV.
D	051-7447	A
SCALE NONE	SHT 62 OF 102	

Headphone Amplifier (MAX9724A)
APN:353S1637
VOLTAGE GAIN:1.53

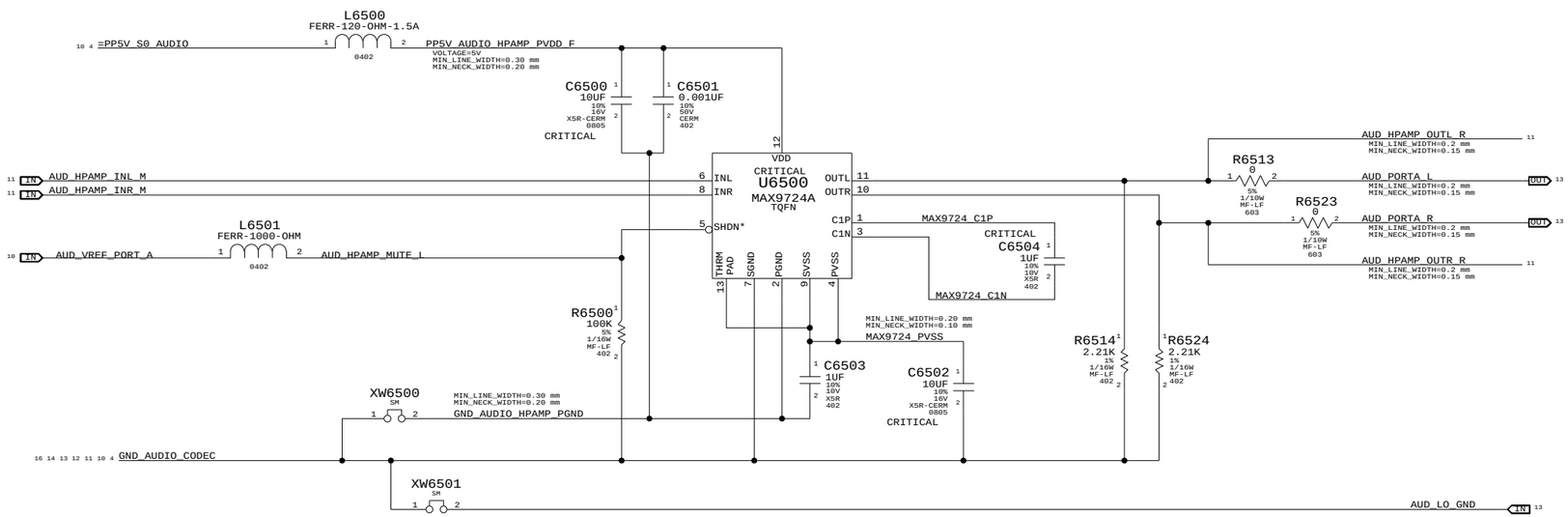

2nd Order DAC Filter
HP:3.52 HZ LP:39 KHZ

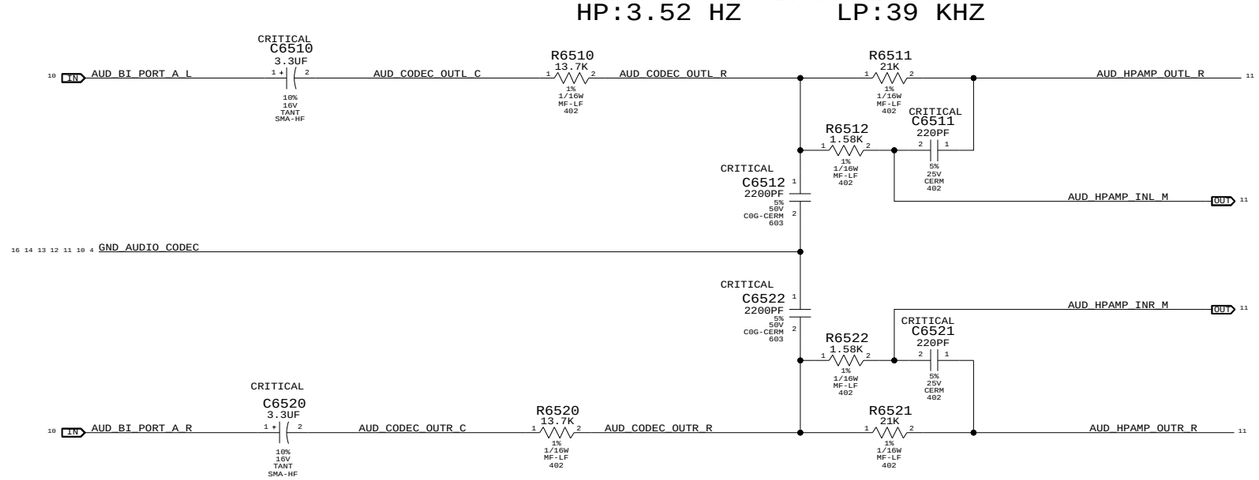

AUDIO: HEADPHONE AMP

SYNC_MASTER=LENGO_M87_AUDIO SYNC_DATE=11/01/2007

NOTICE OF PROPRIETARY PROPERTY

THE INFORMATION CONTAINED HEREIN IS THE PROPRIETARY PROPERTY OF APPLE COMPUTER, INC. THE POSSESSOR AGREES TO THE FOLLOWING

I TO MAINTAIN THE DOCUMENT IN CONFIDENCE

II NOT TO REPRODUCE OR COPY IT

III NOT TO REVEAL OR PUBLISH IN WHOLE OR PART

APPLE INC.

SIZE	DRAWING NUMBER	REV.
D	051-7447	A
SCALE NONE	SHT 65 OF 102	

2X MONO SPEAKER AMPLIFIERS (MAX9705B)

APN: 353S1595

GAIN = 12DB

79Hz < FC < 132Hz

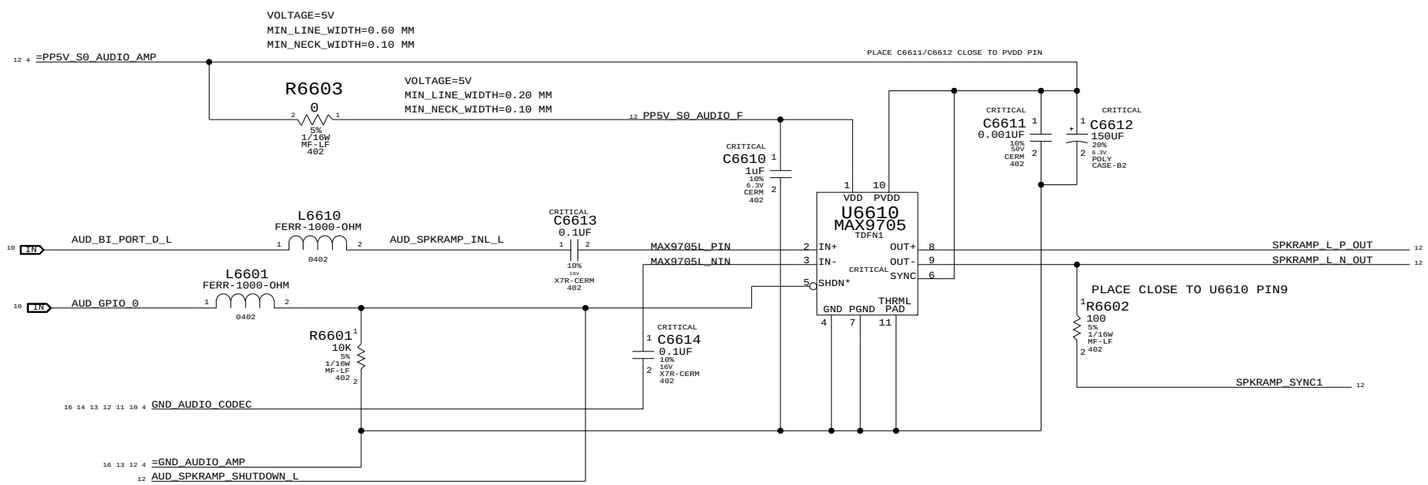

FANCY SPEAKER TESTPOINTS

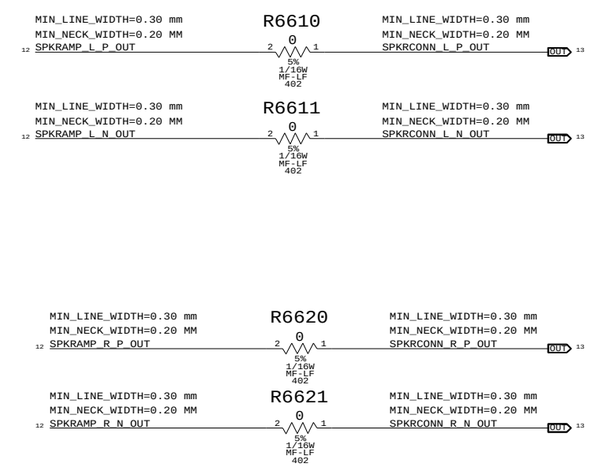

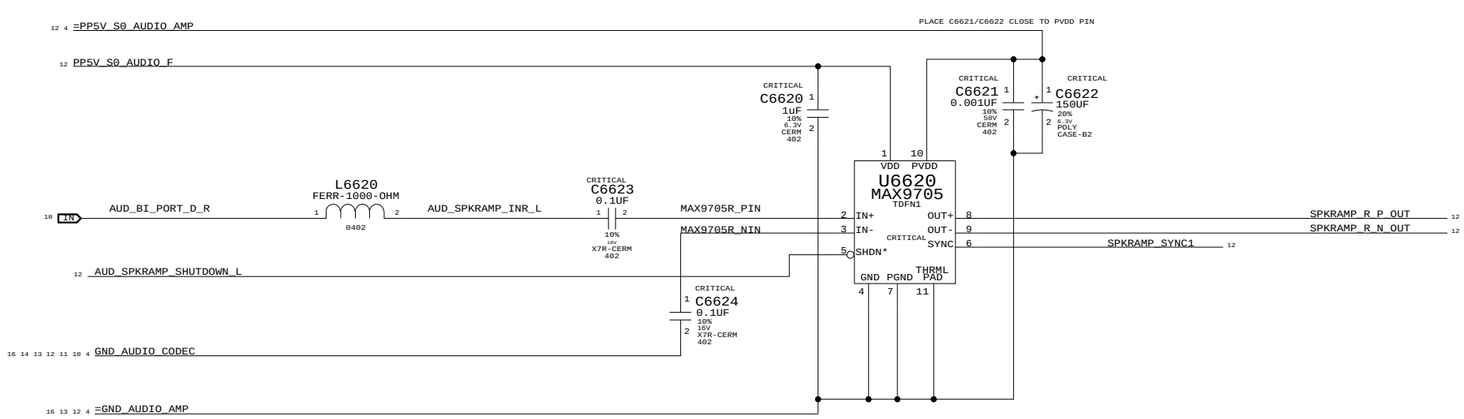

AUDIO:SPEAKER AMP

SYNC_MASTER=LENGO_M87_AUDIO SYNC_DATE=11/01/2007

NOTICE OF PROPRIETARY PROPERTY

THE INFORMATION CONTAINED HEREIN IS THE PROPRIETARY PROPERTY OF APPLE COMPUTER, INC. THE POSSESSOR AGREES TO THE FOLLOWING

I TO MAINTAIN THE DOCUMENT IN CONFIDENCE

II NOT TO REPRODUCE OR COPY IT

III NOT TO REVEAL OR PUBLISH IN WHOLE OR PART

APPLE INC.

SIZE	DRAWING NUMBER	REV.
D	051-7447	A
SCALE NONE	SHT 66 OF 102	

PART#	QTY	DESCRIPTION	REFERENCE DESIGNATOR(S)	CRITICAL	BOM OPTION
514-0406	1	CONN,RCPT,OPTICAL-COPPER	J6700	?	COMBOJACK

AUDIO JACK 1 LO/HP JACK, SPDIF TX

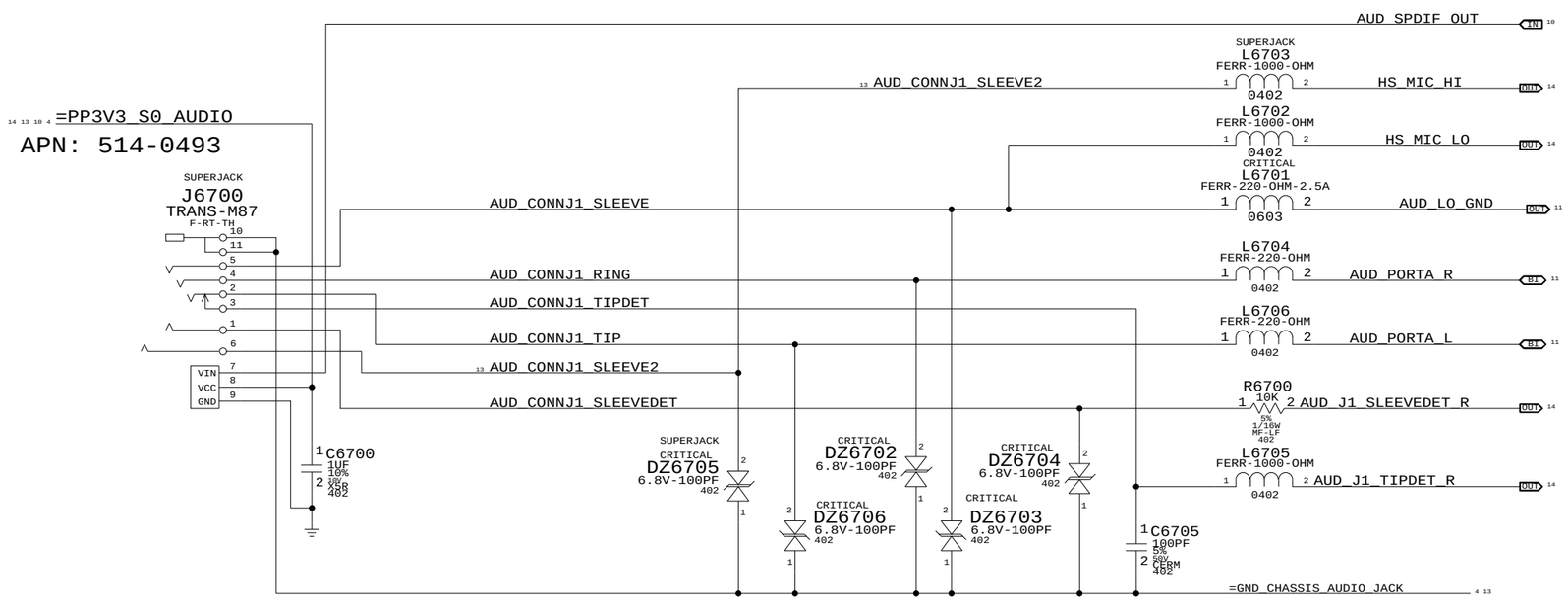

PLACE AT GROUND MOAT

SPEAKER/MIC CONNECTOR
APN: 518-0262

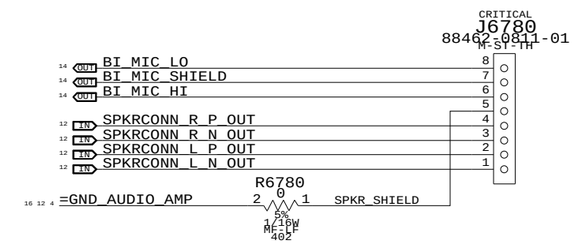

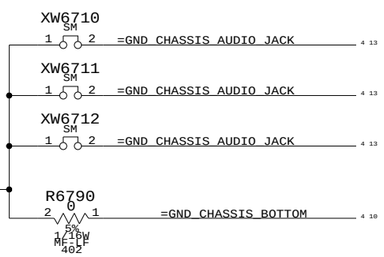

AUDIO SHIELD
(FILLED SHAPE)

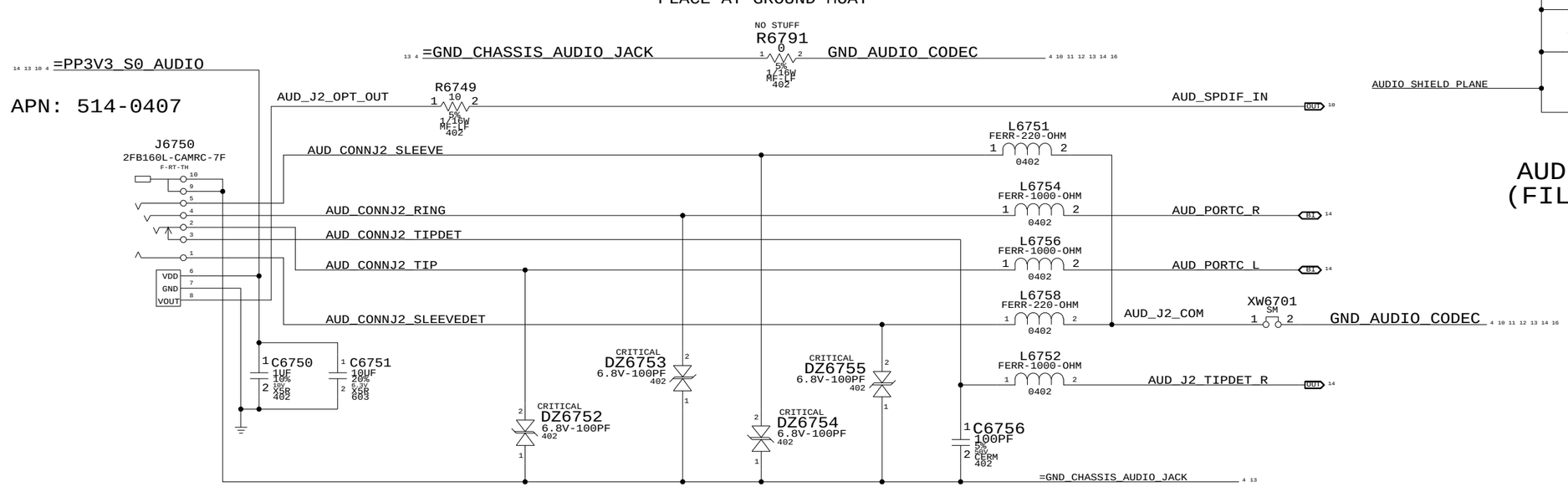

AUDIO JACK 2 LINE IN JACK, SPDIF RX

AUDIO: JACKS

SYNC_MASTER=LENGO_M87_AUDIO SYNC_DATE=11/01/2007

NOTICE OF PROPRIETARY PROPERTY

THE INFORMATION CONTAINED HEREIN IS THE PROPRIETARY PROPERTY OF APPLE COMPUTER, INC. THE POSSESSOR AGREES TO THE FOLLOWING

I TO MAINTAIN THE DOCUMENT IN CONFIDENCE

II NOT TO REPRODUCE OR COPY IT

III NOT TO REVEAL OR PUBLISH IN WHOLE OR PART

APPLE INC.

SIZE	DRAWING NUMBER	REV.
D	051-7447	A
SCALE NONE	SHT 67	OF 102

CODEC OUTPUT SIGNAL PATHS

FUNCTION	VOLUME	CONVERTER	PIN COMPLEX	MUTE CONTROL	DET ASSIGNMENT
HP/LINE OUT	0X0D (15)	0X03 (3)	0X15 (21,A)	VREF_A	0X15 (21,A)
SPEAKER	0X26 (38)	0X25 (37)	0X14 (20,D)	GPIO_0	N/A
SPDIF OUT	N/A	0X06 (6)	0x1E (SPDIF OUT)	N/A	0X1B (27,E)

CODEC INPUT SIGNAL PATHS

FUNCTION	MIXER(INPUT)	CONVERTER	PIN COMPLEX	VREF	DET ASSIGNMENT
LINE IN	0X23 (35)	0X08 (8)	0X1A (26,C)	N/A	0X1A (26,C)
SPDIF IN	N/A	0X0A (10)	0x1F (SPDIF IN)	N/A	N/A
MIC (BUILT IN)	0X24 (36)	0X07 (7)	0X18 (24,B)	B (80%)	N/A
MIC (HEADSET)	0X24 (36)	0X07 (7)	0X19 (25,F)	F (80%)	SOUTHBRIDGE

PORT C LI

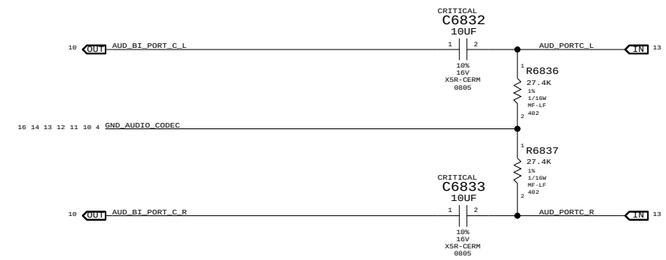

PORT A DETECT

PORT E DETECT(SPDIF DELEGATE)

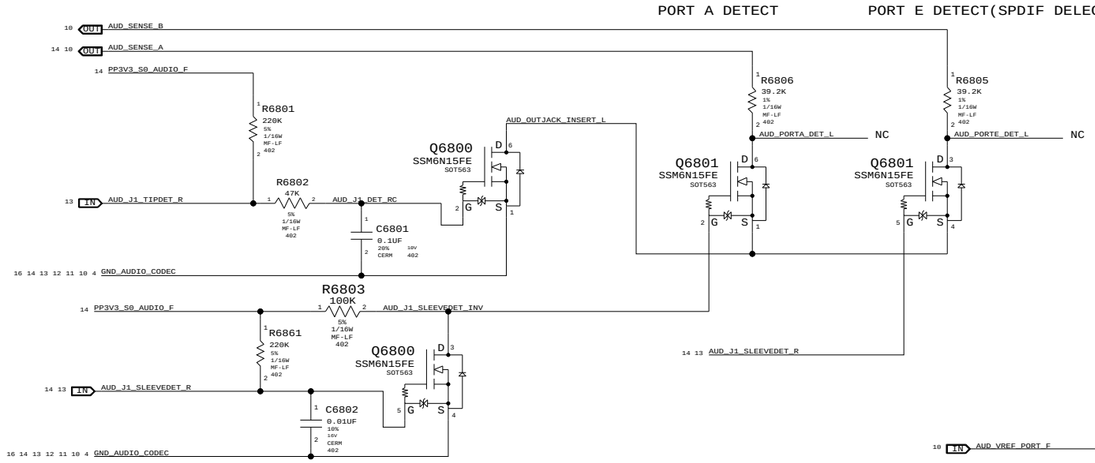

PORT B (BUILT-IN MIC)

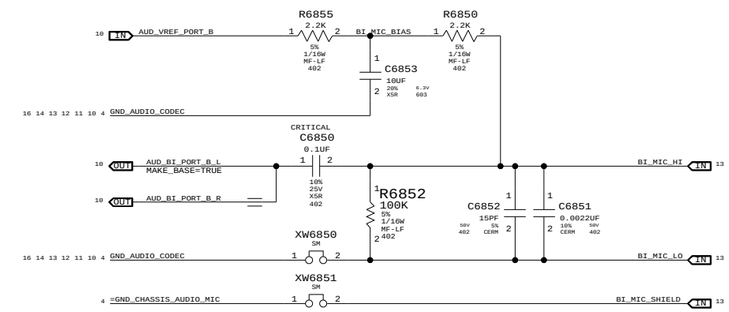

PORT F (HEADSET MIC)

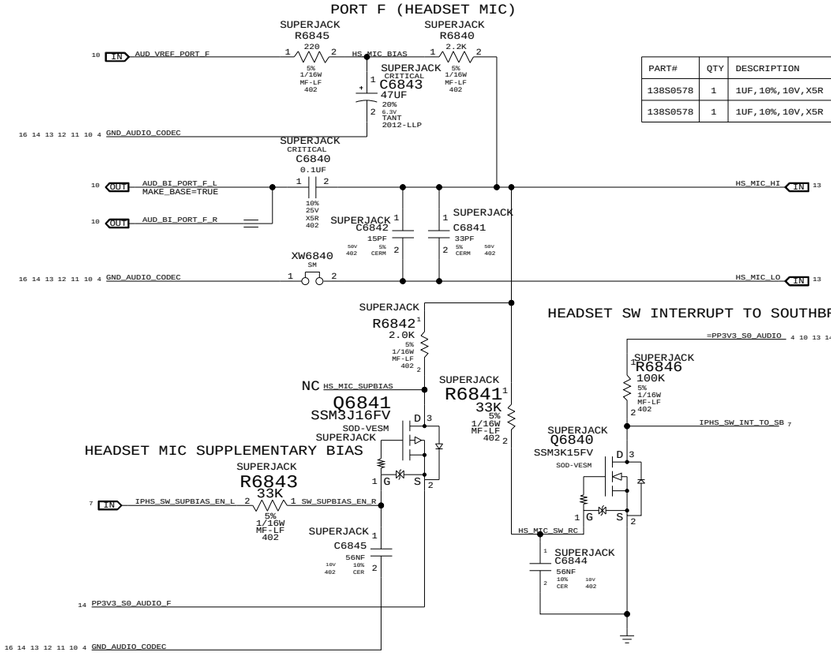

HEADSET SW INTERRUPT TO SOUTHBRIDGE

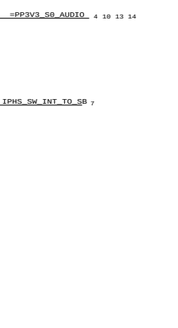

Line-in (PORT C) DETECT

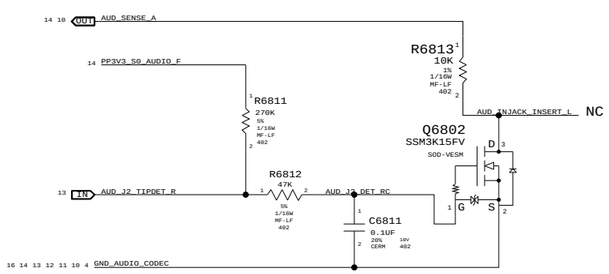

PLACE L6800/C6800 CLOSE TO Q6800/01/02

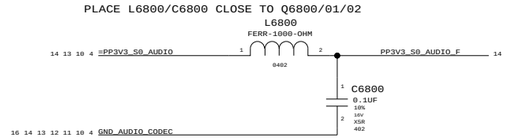

PART#	QTY	DESCRIPTION	REFERENCE DESIGNATOR(S)	CRITICAL	BOM OPTION
138S0578	1	1UF,10%,10V,X5R	C6842	CRITICAL	COMBOJACK
138S0578	1	1UF,10%,10V,X5R	C6840	CRITICAL	COMBOJACK

AUDIO: JACK TRANSLATORS

SYNC_MASTER=LENGO_M87_AUDIO SYNC_DATE=11/01/2007

NOTICE OF PROPRIETARY PROPERTY

THE INFORMATION CONTAINED HEREIN IS THE PROPRIETARY PROPERTY OF APPLE COMPUTER, INC. THE POSSESSOR AGREES TO THE FOLLOWING

I TO MAINTAIN THE DOCUMENT IN CONFIDENCE

II NOT TO REPRODUCE OR COPY IT

III NOT TO REVEAL OR PUBLISH IN WHOLE OR PART

APPLE INC.

SIZE	DRAWING NUMBER	REV.
D	051-7447	A

SCALE NONE SHT 68 OF 102

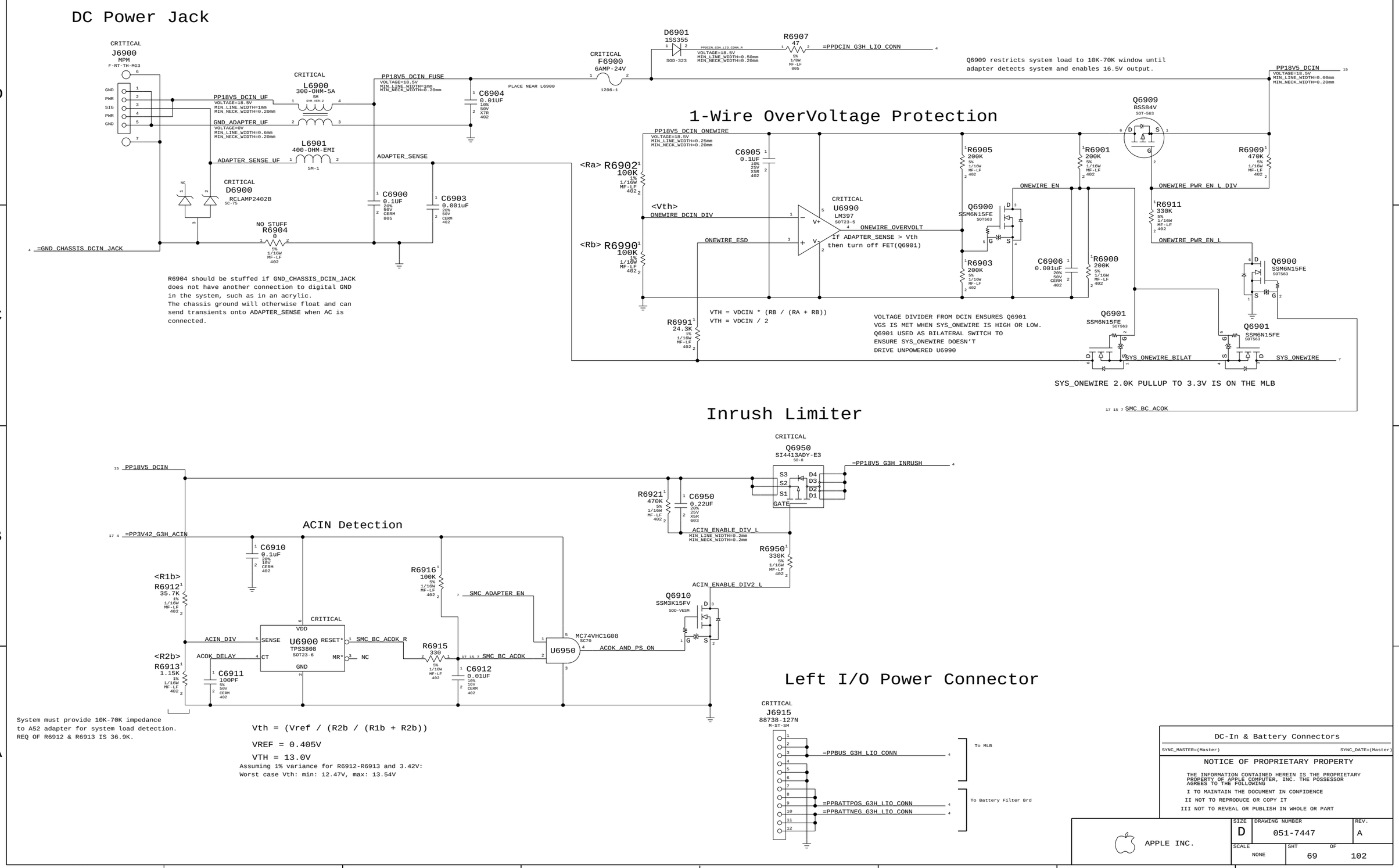

DC-In & Battery Connectors

SYNC_MASTER=(Master) SYNC_DATE=(Master)

NOTICE OF PROPRIETARY PROPERTY

THE INFORMATION CONTAINED HEREIN IS THE PROPRIETARY PROPERTY OF APPLE COMPUTER, INC. THE POSSESSOR AGREES TO THE FOLLOWING

I TO MAINTAIN THE DOCUMENT IN CONFIDENCE

II NOT TO REPRODUCE OR COPY IT

III NOT TO REVEAL OR PUBLISH IN WHOLE OR PART

APPLE INC.

SIZE	DRAWING NUMBER	REV.
D	051-7447	A
SCALE NONE	SHT 69 OF 102	

5V/3.3V POWER SUPPLY

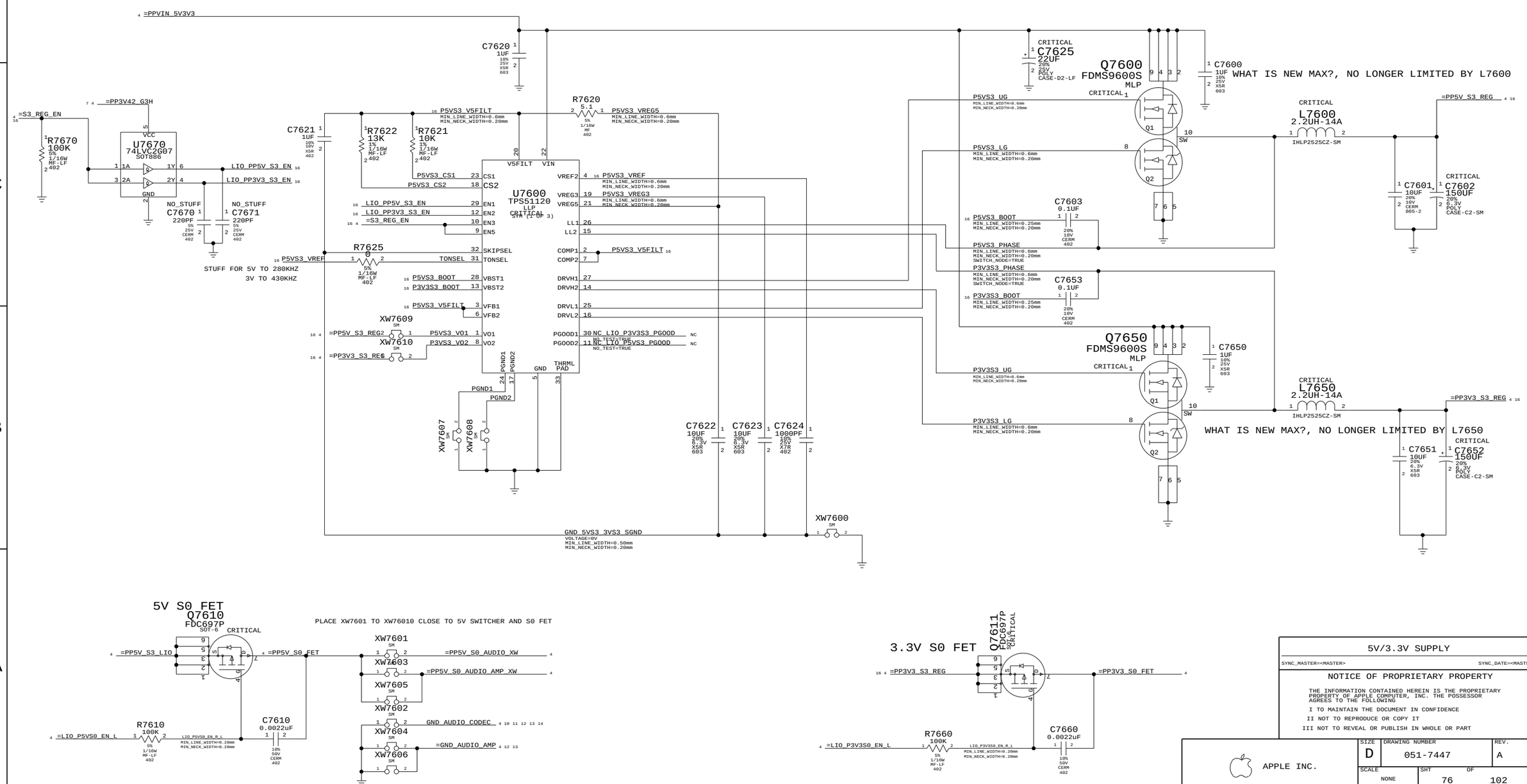

5V/3.3V SUPPLY

SYNC_MASTER=<MASTER> SYNC_DATE=<MASTER>

NOTICE OF PROPRIETARY PROPERTY

THE INFORMATION CONTAINED HEREIN IS THE PROPRIETARY PROPERTY OF APPLE COMPUTER, INC. THE POSSESSOR AGREES TO THE FOLLOWING

I TO MAINTAIN THE DOCUMENT IN CONFIDENCE

II NOT TO REPRODUCE OR COPY IT

III NOT TO REVEAL OR PUBLISH IN WHOLE OR PART

APPLE INC.

SIZE	DRAWING NUMBER	REV.
D	051-7447	A
SCALE NONE	SHT 76 OF 102	

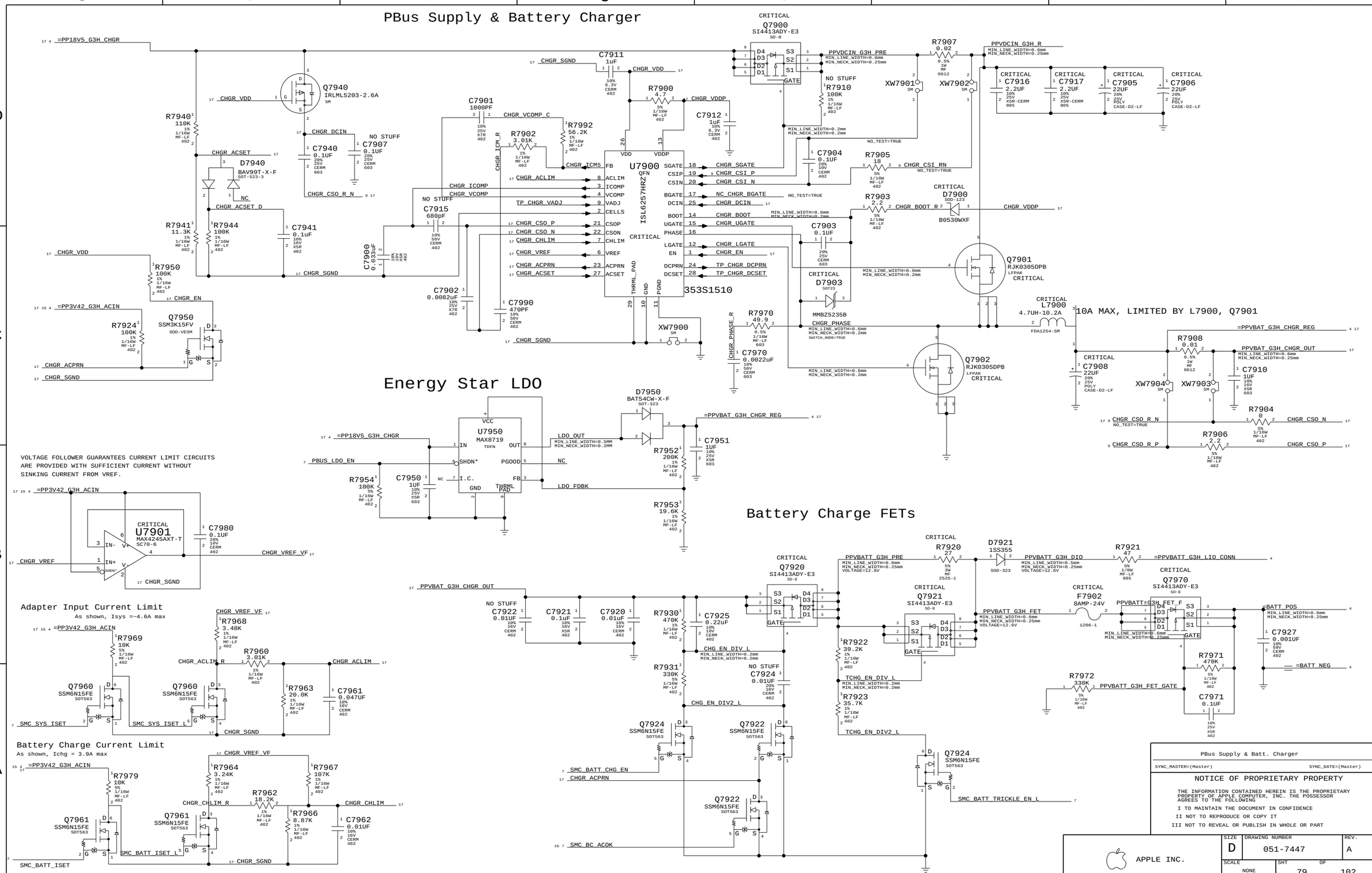
PBus Supply & Battery Charger
Energy Star LDO
Battery Charge FETs
Adapter Input Current Limit
As shown, Isys =~4.6A max
Battery Charge Current Limit
As shown, Ichg = 3.9A max
VOLTAGE FOLLOWER GUARANTEES CURRENT LIMIT CIRCUITS ARE PROVIDED WITH SUFFICIENT CURRENT WITHOUT SINKING CURRENT FROM VREF.
10A MAX, LIMITED BY L7900, Q7901
U7900 ISL6257HRZ QFN 353S1510
U7950 MAX8719 TDFN
U7901 MAX4245AXT-T SC70-6
Q7900 SI4413ADY-E3 SO-8
Q7920 SI4413ADY-E3 SO-8
Q7921 SI4413ADY-E3 SO-8
Q7970 SI4413ADY-E3 SO-8
Q7940 IRLML5203-2.6A
Q7901 RJK0305DPB LFPAK
Q7902 RJK0305DPB LFPAK
Q7950 SSM3K15FV SOD-VESM
D7940 BAV99T-X-F SOT-523-3
D7950 BAT54CW-X-F SOT-323
D7900 B0530WXF SOD-123
D7903 MMBZ5235B SOT23
D7921 1SS355 SOD-323
F7902 8AMP-24V 1206-1
L7900 4.7UH-10.2A FDA1254-SM
Q7960 SSM6N15FE SOT563
Q7961 SSM6N15FE SOT563
Q7922 SSM6N15FE SOT563
Q7924 SSM6N15FE SOT563
=PP18V5_G3H_CHGR
=PP3V42_G3H_ACIN
=PPVBAT_G3H_CHGR_REG
=PPVBAT_G3H_LIO_CONN
=BATT_POS
=BATT_NEG
PPVDCIN_G3H_PRE
PPVDCIN_G3H_R
PPVBAT_G3H_CHGR_OUT
PPVBAT_G3H_PRE
PPVBAT_G3H_DIO
PPVBAT_G3H_FET
PPVBATT+G3H_FET_F
PPVBAT_G3H_FET_GATE
CHGR_SGND
CHGR_VDD
CHGR_VDDP
CHGR_DCIN
CHGR_ACSET
CHGR_ACSET_D
CHGR_CSO_R_N
CHGR_CSO_P
CHGR_CSO_N
CHGR_CHLIM
CHGR_ACLIM
CHGR_ICOMP
CHGR_VCOMP
CHGR_VREF
CHGR_ACPRN
CHGR_EN
CHGR_PHASE
CHGR_BOOT
CHGR_UGATE
CHGR_LGATE
CHGR_SGATE
CHGR_CSI_P
CHGR_CSI_N
CHGR_CSI_RN
CHGR_VREF_VF
CHGR_ACLIM_R
CHGR_CHLIM_R
SMC_SYS_ISET
SMC_SYS_ISET_L
SMC_BATT_ISET
SMC_BATT_ISET_L
SMC_BATT_CHG_EN
SMC_BATT_TRICKLE_EN_L
SMC_BC_ACOK
PBus Supply & Batt. Charger
SYNC_MASTER=(Master)
SYNC_DATE=(Master)
NOTICE OF PROPRIETARY PROPERTY
THE INFORMATION CONTAINED HEREIN IS THE PROPRIETARY PROPERTY OF APPLE COMPUTER, INC. THE POSSESSOR AGREES TO THE FOLLOWING
I TO MAINTAIN THE DOCUMENT IN CONFIDENCE
II NOT TO REPRODUCE OR COPY IT
III NOT TO REVEAL OR PUBLISH IN WHOLE OR PART
APPLE INC.
SIZE D
DRAWING NUMBER 051-7447
REV. A
SCALE NONE
SHT 79 OF 102

Inverter Connector

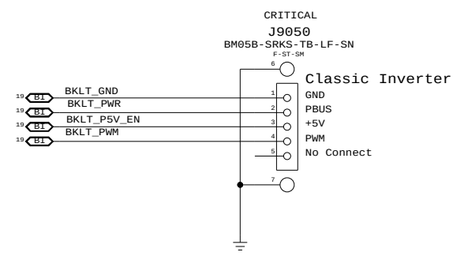

Inverter Connector

SYNC_MASTER=SPLIT_INVERTER SYNC_DATE=12/06/2006

NOTICE OF PROPRIETARY PROPERTY

THE INFORMATION CONTAINED HEREIN IS THE PROPRIETARY PROPERTY OF APPLE COMPUTER, INC. THE POSSESSOR AGREES TO THE FOLLOWING

I TO MAINTAIN THE DOCUMENT IN CONFIDENCE

II NOT TO REPRODUCE OR COPY IT

III NOT TO REVEAL OR PUBLISH IN WHOLE OR PART

APPLE INC.

SIZE	DRAWING NUMBER	REV.
D	051-7447	A

SCALE NONE

SHT 90 OF 102

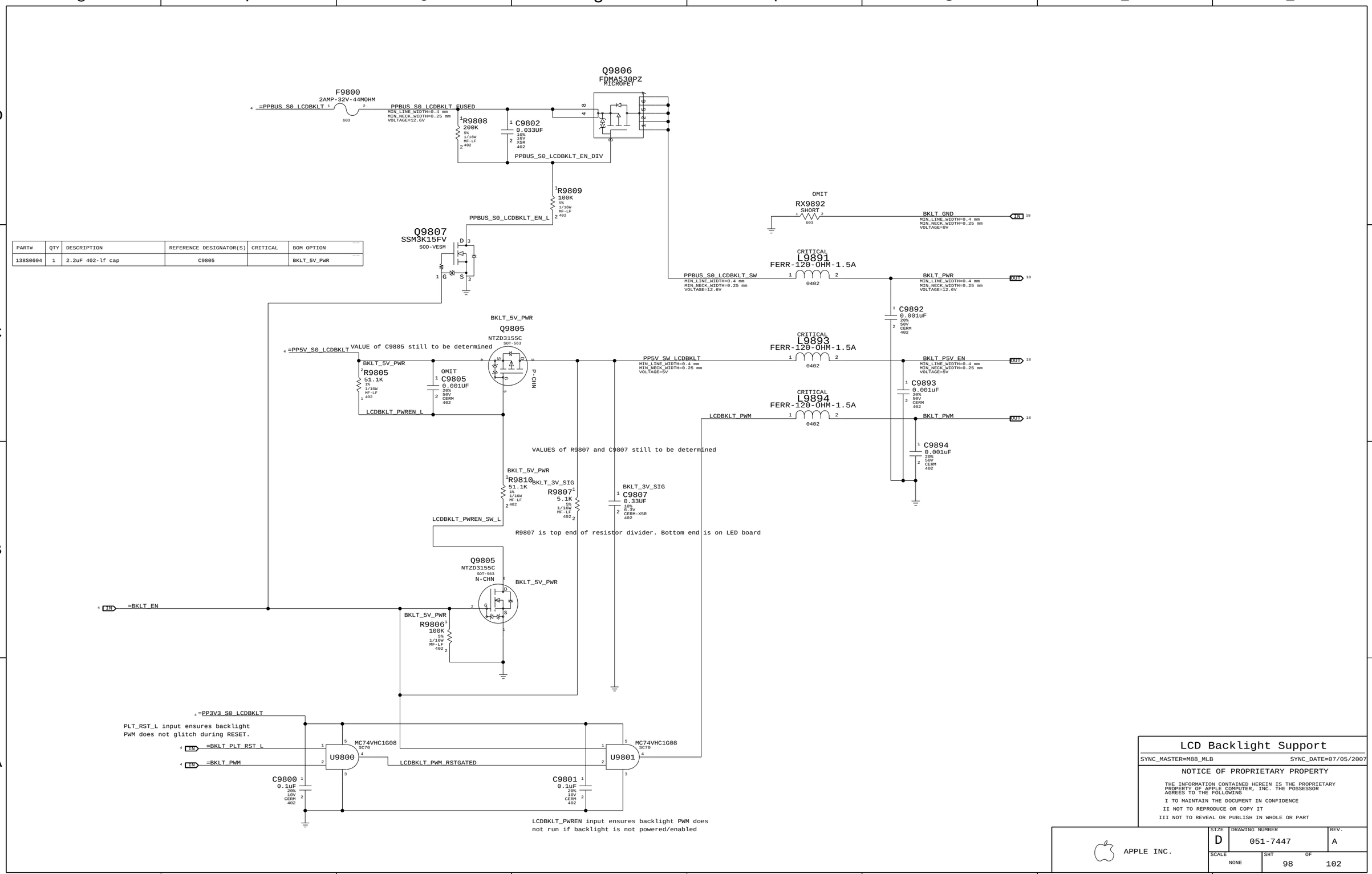

PART#	QTY	DESCRIPTION	REFERENCE DESIGNATOR(S)	CRITICAL	BOM OPTION
138S0604	1	2.2uF 402-lf cap	C9805		BKLT_5V_PWR

LCD Backlight Support

SYNC_MASTER=M88_MLB SYNC_DATE=07/05/2007

NOTICE OF PROPRIETARY PROPERTY

THE INFORMATION CONTAINED HEREIN IS THE PROPRIETARY PROPERTY OF APPLE COMPUTER, INC. THE POSSESSOR AGREES TO THE FOLLOWING

I TO MAINTAIN THE DOCUMENT IN CONFIDENCE

II NOT TO REPRODUCE OR COPY IT

III NOT TO REVEAL OR PUBLISH IN WHOLE OR PART

APPLE INC.

SIZE	DRAWING NUMBER	REV.
D	051-7447	A
SCALE NONE	SHT 98	OF 102

Title: Basenet Report
Design: lio
Date: Oct 5 17:43:38 2007

Base nets and synonyms for lio_lib.LIO(@lio_lib.lio(sch_1))

Base Signal	Synonyms	Location([Zone][dir])
4V5_REG_FB	4V5_REG_FB - @lio_lib.LIO	10A4
=BATT_POS	=BATT_POS - @lio_lib.LIO	4C1 17B1
	=PPBATTPOS_G3H_LIO_CONN - @lio_lib.LIO	4D3 15A3
	BATT_POS - @lio_lib.LIO	4D1
	=PPBATTPOS_G3H_LIO_CONN - @lio_lib.LIO	4D3 15A3
=BKLT_EN	=BKLT_EN - @lio_lib.LIO	4C3 19B8
	LCDBKLT_PWREN - @lio_lib.LIO	4C1 7C6
=BKLT_PLT_RST_L	=BKLT_PLT_RST_L - @lio_lib.LIO	4C3 19A7
	PLT_RESET_L - @lio_lib.LIO	4C1 5C3 6C7 7C6
=BKLT_PPBUS_S0_LCDBKLT_EN	=BKLT_PPBUS_S0_LCDBKLT_EN - @lio_lib.LIO	4B6
	=PP5V_S0_FET - @lio_lib.LIO	4B8 16A7
	=PP5V_S0_LCDBKLT - @lio_lib.LIO	4B6 19C7
	PP5V_S0_FET - @lio_lib.LIO	4B6
	=PP5V_S0_LCDBKLT - @lio_lib.LIO	4B6 19C7
	=PP5V_S0_FET - @lio_lib.LIO	4B8 16A7
=BKLT_PWM	=BKLT_PWM - @lio_lib.LIO	4C3 19A7
	LCDBKLT_PWM_UNBUF - @lio_lib.LIO	4C1 7C6
=GND_AUDIO	=GND_AUDIO - @lio_lib.LIO	4B8
	GND_AUDIO_CODEC - @lio_lib.LIO	4B6 10A3 10B6 10D2 11B7 11C7 12A8 12C7 13A3 13B4 14A5 14A8 14A8 14B5 14B5 14B8 14C3 14C3 14C8 14D3 16A6
	GND_AUDIO - @lio_lib.LIO	4B6
=GND_AUDIO_AMP	=GND_AUDIO_AMP - @lio_lib.LIO	4B8 12A8 12C7 13C3 16A6
	GND_AUDIO_AMP - @lio_lib.LIO	4B6
=GND_CHASSIS_AUDIO_JACK	=GND_CHASSIS_AUDIO_JACK - @lio_lib.LIO	4B6 13A3 13B1 13B1 13B1 13B3 13B7
	CHASSIS_GND1 - @lio_lib.LIO	4B8
=GND_CHASSIS_AUDIO_MIC	=GND_CHASSIS_AUDIO_MIC - @lio_lib.LIO	4A6 14B3
	CHASSIS_GND2 - @lio_lib.LIO	4A8
=GND_CHASSIS_BOTTOM	=GND_CHASSIS_BOTTOM - @lio_lib.LIO	4A6 10A7 13B1
	CHASSIS_GND4 - @lio_lib.LIO	4A8
=GND_CHASSIS_DCIN_JACK	=GND_CHASSIS_DCIN_JACK - @lio_lib.LIO	4A6 15C8
	CHASSIS_GND3 - @lio_lib.LIO	4A7
=LIO_P3V3S0_EN_L	=LIO_P3V3S0_EN_L - @lio_lib.LIO	4D1 16A4
	=LIO_P5VS0_EN_L - @lio_lib.LIO	4D1 16A8
	PM_SLP_S3_LS5V - @lio_lib.LIO	4D3 7B6
	=LIO_P5VS0_EN_L - @lio_lib.LIO	4D1 16A8
=PP1V5_S0	=PP1V5_S0 - @lio_lib.LIO	4C8 7C6
	=PP1V5_S0_EXCARD - @lio_lib.LIO	4C6 6C7 6C8
	=PP1V5_S0_MINI - @lio_lib.LIO	4C6 5C2
	PP1V5_S0 - @lio_lib.LIO	4C6
	=PP1V5_S0_MINI - @lio_lib.LIO	4C6 5C2
	=PP1V5_S0_EXCARD - @lio_lib.LIO	4C6 6C7 6C8
=PP3V3_S0_AUDIO	=PP3V3_S0_AUDIO - @lio_lib.LIO	4C6 10A7 10D7 13B8 13D8 14A3 14A8
	=PP3V3_S0_EXCARD - @lio_lib.LIO	4C6 6B4 6C7
	=PP3V3_S0_FET - @lio_lib.LIO	4C8 16A2
	=PP3V3_S0_LCDBKLT - @lio_lib.LIO	4C6 19A7
	=PP3V3_S0_PDCISENS - @lio_lib.LIO	4C6 9C4
	=PP3V3_S0_TMPSNSR - @lio_lib.LIO	4C6 9B5
	=PP3V3_S0_PBATTISENS - @lio_lib.LIO	4C6 9C7
	PP3V3_S0_LIO - @lio_lib.LIO	4C6
	=PP3V3_S0_TMPSNSR - @lio_lib.LIO	4C6 9B5
	=PP3V3_S0_PDCISENS - @lio_lib.LIO	4C6 9C4
	=PP3V3_S0_PBATTISENS - @lio_lib.LIO	4C6 9C7
	=PP3V3_S0_LCDBKLT - @lio_lib.LIO	4C6 19A7
	=PP3V3_S0_FET - @lio_lib.LIO	4C8 16A2
	=PP3V3_S0_EXCARD - @lio_lib.LIO	4C6 6B4 6C7
=PP3V3_S3_EXCARD	=PP3V3_S3_EXCARD - @lio_lib.LIO	4C6 6B8 6C7 6C8
	=PP3V3_S3_REG - @lio_lib.LIO	4C8 16A4 16B1 16B7
	=PP3V3_S3_MINI - @lio_lib.LIO	4C6 5C2 5D1
	PP3V3_S3_LIO - @lio_lib.LIO	4C6
	=PP3V3_S3_REG - @lio_lib.LIO	4C8 16A4 16B1 16B7
	=PP3V3_S3_MINI - @lio_lib.LIO	4C6 5C2 5D1
=PP3V42_G3H	=PP3V42_G3H - @lio_lib.LIO	4D8 7C6 16C8
	=PP3V42_G3H_ACIN - @lio_lib.LIO	4C6 15B8 17A8 17B8 17B8 17C8
	PP3V42_G3H - @lio_lib.LIO	4D6
	=PP3V42_G3H_ACIN - @lio_lib.LIO	4C6 15B8 17A8 17B8 17B8 17C8
=PP5V_S0_AUDIO	=PP5V_S0_AUDIO - @lio_lib.LIO	4B6 10A7 11D7
	=PP5V_S0_AUDIO_XW - @lio_lib.LIO	4B8 16A6
	PP5V_S0_AUDIO - @lio_lib.LIO	4B6
	=PP5V_S0_AUDIO_XW - @lio_lib.LIO	4B8 16A6
=PP5V_S0_AUDIO_AMP	=PP5V_S0_AUDIO_AMP - @lio_lib.LIO	4B6 12B8 12D8
	=PP5V_S0_AUDIO_AMP_XW - @lio_lib.LIO	4B8 16A6
	PP5V_S0_AUDIO_AMP - @lio_lib.LIO	4B6
	=PP5V_S0_AUDIO_AMP_XW - @lio_lib.LIO	4B8 16A6
=PP5V_S3_LIO	=PP5V_S3_LIO - @lio_lib.LIO	4B6 16A8
	=PP5V_S3_REG - @lio_lib.LIO	4C8 16B7 16C1
	=PP5V_S3_LTUSB - @lio_lib.LIO	4C6 8C7
	PP5V_S3_LIO - @lio_lib.LIO	4C6
	=PP5V_S3_REG - @lio_lib.LIO	4C8 16B7 16C1
	=PP5V_S3_LTUSB - @lio_lib.LIO	4C6 8C7
=PP18V5_G3H_CHGR	=PP18V5_G3H_CHGR - @lio_lib.LIO	4D6 17B7 17D8
	=PP18V5_G3H_INRUSH - @lio_lib.LIO	4D8 15B3
	PP18V5_G3H_CHGR - @lio_lib.LIO	4D6
	=PP18V5_G3H_INRUSH - @lio_lib.LIO	4D8 15B3
=PPBUS_G3H_LIO_CONN	=PPBUS_G3H_LIO_CONN - @lio_lib.LIO	4D6 15A3
	=PPBUS_S0_LCDBKLT - @lio_lib.LIO	4D6 19D7
	=PPVBAT_G3H_CHGR_REG - @lio_lib.LIO	4D8 17C1 17C4
	=PPVIN_5V3V3 - @lio_lib.LIO	4D6 16D8
	PPVBAT_G3H_CHGR_REG - @lio_lib.LIO	4D6
	=PPVIN_5V3V3 - @lio_lib.LIO	4D6 16D8
	=PPVBAT_G3H_CHGR_REG - @lio_lib.LIO	4D8 17C1 17C4
	=PPBUS_S0_LCDBKLT - @lio_lib.LIO	4D6 19D7
=PPDCIN_G3H	=PPDCIN_G3H - @lio_lib.LIO	4D6 7C6
	=PPVBATT_G3H_LIO_CONN - @lio_lib.LIO	4D8 17B1
	=PPDCIN_G3H_LIO_CONN - @lio_lib.LIO	4D8 15D3
	PPDCIN_G3H - @lio_lib.LIO	4D6
	=PPVBATT_G3H_LIO_CONN - @lio_lib.LIO	4D8 17B1
	=PPDCIN_G3H_LIO_CONN - @lio_lib.LIO	4D8 15D3
=S3_REG_EN	=S3_REG_EN - @lio_lib.LIO	4D1 16C7 16C8
	LIO_S3_EN - @lio_lib.LIO	4D3 7B6
=SMBUS_EXCARD_SCL	=SMBUS_EXCARD_SCL - @lio_lib.LIO	4A3 6C3
	SMBUS_SB_SCL - @lio_lib.LIO	4A6 7C3
=SMBUS_EXCARD_SDA	=SMBUS_EXCARD_SDA - @lio_lib.LIO	4A3 6C3
	SMBUS_SB_SDA - @lio_lib.LIO	4A6 7C3
=SMBUS_MINI_SCL	=SMBUS_MINI_SCL - @lio_lib.LIO	4A3 5B3
	SMBUS_SMC_SCL - @lio_lib.LIO	4A6 7C3
	=SMBUS_TMPSNSR_SCL - @lio_lib.LIO	4A3 9B5
	SMBUS_SMC_SCL - @lio_lib.LIO	4A6 7C3
	=SMBUS_TMPSNSR_SCL - @lio_lib.LIO	4A3 9B5
=SMBUS_MINI_SDA	=SMBUS_MINI_SDA - @lio_lib.LIO	4A3 5B3
	SMBUS_SMC_SDA - @lio_lib.LIO	4A6 7C3
	=SMBUS_TMPSNSR_SDA - @lio_lib.LIO	4A3 9B5
	SMBUS_SMC_SDA - @lio_lib.LIO	4A6 7C3
	=SMBUS_TMPSNSR_SDA - @lio_lib.LIO	4A3 9B5
ACIN_DIV	ACIN_DIV - @lio_lib.LIO	15A7
ACIN_ENABLE_DIV2_L	ACIN_ENABLE_DIV2_L - @lio_lib.LIO	15B5
ACIN_ENABLE_DIV_L	ACIN_ENABLE_DIV_L - @lio_lib.LIO	15B5
ACOK_AND_PS_ON	ACOK_AND_PS_ON - @lio_lib.LIO	15A5
ACOK_DELAY	ACOK_DELAY - @lio_lib.LIO	15A7
ADAPTER_SENSE	ADAPTER_SENSE - @lio_lib.LIO	15D6
ADAPTER_SENSE_UF	ADAPTER_SENSE_UF - @lio_lib.LIO	15D7
AUDIO_SHIELD_PLANE	AUDIO_SHIELD_PLANE - @lio_lib.LIO	13B3
AUD_4V5_REG_IN	AUD_4V5_REG_IN - @lio_lib.LIO	10A6
AUD_BI_PORT_A_L	AUD_BI_PORT_A_L - @lio_lib.LIO	10C2 11B7
AUD_BI_PORT_A_R	AUD_BI_PORT_A_R - @lio_lib.LIO	10C2 11A7
AUD_BI_PORT_B_L	AUD_BI_PORT_B_L - @lio_lib.LIO	10C2 14C3
	AUD_BI_PORT_B_R - @lio_lib.LIO	10C2 14C3
AUD_BI_PORT_C_L	AUD_BI_PORT_C_L - @lio_lib.LIO	10C7 14D4
AUD_BI_PORT_C_R	AUD_BI_PORT_C_R - @lio_lib.LIO	10C7 14D4
AUD_BI_PORT_D_L	AUD_BI_PORT_D_L - @lio_lib.LIO	10C7 12C8
AUD_BI_PORT_D_R	AUD_BI_PORT_D_R - @lio_lib.LIO	10C7 12A8
AUD_BI_PORT_F_L	AUD_BI_PORT_F_L - @lio_lib.LIO	10C2 14B5
	AUD_BI_PORT_F_R - @lio_lib.LIO	10C2 14B5
AUD_CODEC_JDREF	AUD_CODEC_JDREF - @lio_lib.LIO	10B4
AUD_CODEC_OUTL_C	AUD_CODEC_OUTL_C - @lio_lib.LIO	11B6
AUD_CODEC_OUTL_R	AUD_CODEC_OUTL_R - @lio_lib.LIO	11B5
AUD_CODEC_OUTR_C	AUD_CODEC_OUTR_C - @lio_lib.LIO	11A6
AUD_CODEC_OUTR_R	AUD_CODEC_OUTR_R - @lio_lib.LIO	11A5
AUD_CODEC_VREF	AUD_CODEC_VREF - @lio_lib.LIO	10B3
AUD_CONNJ1_RING	AUD_CONNJ1_RING - @lio_lib.LIO	13C7
AUD_CONNJ1_SLEEVE	AUD_CONNJ1_SLEEVE - @lio_lib.LIO	13C7
AUD_CONNJ1_SLEEVE2	AUD_CONNJ1_SLEEVE2 - @lio_lib.LIO	13C7 13D5
AUD_CONNJ1_SLEEVEDET	AUD_CONNJ1_SLEEVEDET - @lio_lib.LIO	13C7
AUD_CONNJ1_TIP	AUD_CONNJ1_TIP - @lio_lib.LIO	13C7
AUD_CONNJ1_TIPDET	AUD_CONNJ1_TIPDET - @lio_lib.LIO	13C7
AUD_CONNJ2_RING	AUD_CONNJ2_RING - @lio_lib.LIO	13B7
AUD_CONNJ2_SLEEVE	AUD_CONNJ2_SLEEVE - @lio_lib.LIO	13B7
AUD_CONNJ2_SLEEVEDET	AUD_CONNJ2_SLEEVEDET - @lio_lib.LIO	13A7
AUD_CONNJ2_TIP	AUD_CONNJ2_TIP - @lio_lib.LIO	13A7
AUD_CONNJ2_TIPDET	AUD_CONNJ2_TIPDET - @lio_lib.LIO	13A7
AUD_GPIO_0	AUD_GPIO_0 - @lio_lib.LIO	10C7 12C8
AUD_GPIO_0 R	AUD_GPIO_0 R - @lio_lib.LIO	10C5
AUD_GPIO_1	AUD_GPIO_1 - @lio_lib.LIO	10C7
AUD_HPAMP_INL_M	AUD_HPAMP_INL_M - @lio_lib.LIO	11B3 11C7
AUD_HPAMP_INR_M	AUD_HPAMP_INR_M - @lio_lib.LIO	11A3 11C7
AUD_HPAMP_MUTE_L	AUD_HPAMP_MUTE_L - @lio_lib.LIO	11C6
AUD_HPAMP_OUTL_R	AUD_HPAMP_OUTL_R - @lio_lib.LIO	11B3 11D2
AUD_HPAMP_OUTR_R	AUD_HPAMP_OUTR_R - @lio_lib.LIO	11A3 11C2
AUD_INJACK_INSERT_L	AUD_INJACK_INSERT_L - @lio_lib.LIO	14B6
AUD_J1_DET_RC	AUD_J1_DET_RC - @lio_lib.LIO	14C7
AUD_J1_SLEEVEDET_INV	AUD_J1_SLEEVEDET_INV - @lio_lib.LIO	14C7
AUD_J1_SLEEVEDET_R	AUD_J1_SLEEVEDET_R - @lio_lib.LIO	13C3 14B6 14B8
AUD_J1_TIPDET_R	AUD_J1_TIPDET_R - @lio_lib.LIO	13C3 14C8
AUD_J2_COM	AUD_J2_COM - @lio_lib.LIO	13A4
AUD_J2_DET_RC	AUD_J2_DET_RC - @lio_lib.LIO	14B7
AUD_J2_OPT_OUT	AUD_J2_OPT_OUT - @lio_lib.LIO	13B7
AUD_J2_TIPDET_R	AUD_J2_TIPDET_R - @lio_lib.LIO	13A3 14B8
AUD_LO_GND	AUD_LO_GND - @lio_lib.LIO	11C2 13C3
AUD_OUTJACK_INSERT_L	AUD_OUTJACK_INSERT_L - @lio_lib.LIO	14C6
AUD_PORTA_DET_L	AUD_PORTA_DET_L - @lio_lib.LIO	14C5
AUD_PORTA_L	AUD_PORTA_L - @lio_lib.LIO	11C2 13C3
AUD_PORTA_R	AUD_PORTA_R - @lio_lib.LIO	11C2 13C3
AUD_PORTC_L	AUD_PORTC_L - @lio_lib.LIO	13A3 14D2
AUD_PORTC_R	AUD_PORTC_R - @lio_lib.LIO	13B3 14D2
AUD_PORTE_DET_L	AUD_PORTE_DET_L - @lio_lib.LIO	14C5
AUD_REG_SHDN_L	AUD_REG_SHDN_L - @lio_lib.LIO	10A6
AUD_SENSE_A	AUD_SENSE_A - @lio_lib.LIO	10C2 14B8 14C8
AUD_SENSE_B	AUD_SENSE_B - @lio_lib.LIO	10C2 14C8
AUD_SPDIF_IN	AUD_SPDIF_IN - @lio_lib.LIO	10C2 13B3
AUD_SPDIF_O	AUD_SPDIF_O - @lio_lib.LIO	10D3
AUD_SPDIF_OUT	AUD_SPDIF_OUT - @lio_lib.LIO	10D2 13D3
AUD_SPKRAMP_INL_L	AUD_SPKRAMP_INL_L - @lio_lib.LIO	12C7
AUD_SPKRAMP_INR_L	AUD_SPKRAMP_INR_L - @lio_lib.LIO	12A7
AUD_SPKRAMP_SHUTDOWN_L	AUD_SPKRAMP_SHUTDOWN_L - @lio_lib.LIO	12A8 12C7
AUD_VREF_PORT_A	AUD_VREF_PORT_A - @lio_lib.LIO	10C2 11C7
AUD_VREF_PORT_B	AUD_VREF_PORT_B - @lio_lib.LIO	10C2 14C3
AUD_VREF_PORT_F	AUD_VREF_PORT_F - @lio_lib.LIO	10C2 14B5
AVDD_ADC_DAC	AVDD_ADC_DAC - @lio_lib.LIO	10D4
BEEP	BEEP - @lio_lib.LIO	10C5
BI_MIC_BIAS	BI_MIC_BIAS - @lio_lib.LIO	14C3
BI_MIC_HI	BI_MIC_HI - @lio_lib.LIO	13C2 14C1
BI_MIC_LO	BI_MIC_LO - @lio_lib.LIO	13C2 14C1
BI_MIC_SHIELD	BI_MIC_SHIELD - @lio_lib.LIO	13C2 14B1
BKLT_GND	BKLT_GND - @lio_lib.LIO	18C5 19C3
BKLT_P5V_EN	BKLT_P5V_EN - @lio_lib.LIO	18C5 19C3
BKLT_PWM	BKLT_PWM - @lio_lib.LIO	18C5 19C3
BKLT_PWR	BKLT_PWR - @lio_lib.LIO	18C5 19C3
CHGR_ACLIM	CHGR_ACLIM - @lio_lib.LIO	17A6 17D6
CHGR_ACLIM_R	CHGR_ACLIM_R - @lio_lib.LIO	17A7
CHGR_ACPRN	CHGR_ACPRN - @lio_lib.LIO	17A5 17C6 17C8
CHGR_ACSET	CHGR_ACSET - @lio_lib.LIO	17C6 17D7
CHGR_ACSET_D	CHGR_ACSET_D - @lio_lib.LIO	17C7
CHGR_BOOT	CHGR_BOOT - @lio_lib.LIO	17C4
CHGR_BOOT_R	CHGR_BOOT_R - @lio_lib.LIO	17C3
CHGR_CHLIM	CHGR_CHLIM - @lio_lib.LIO	17A6 17C6
CHGR_CHLIM_R	CHGR_CHLIM_R - @lio_lib.LIO	17A7
CHGR_CSI_N	CHGR_CSI_N - @lio_lib.LIO	17D4
CHGR_CSI_P	CHGR_CSI_P - @lio_lib.LIO	9D4 17D4
CHGR_CSI_RN	CHGR_CSI_RN - @lio_lib.LIO	9D4 17D3
CHGR_CSO_N	CHGR_CSO_N - @lio_lib.LIO	17C1 17C6
CHGR_CSO_P	CHGR_CSO_P - @lio_lib.LIO	17B1 17C6
CHGR_CSO_R_N	CHGR_CSO_R_N - @lio_lib.LIO	9D7 17C2 17D6
CHGR_CSO_R_P	CHGR_CSO_R_P - @lio_lib.LIO	9D7 17B2
CHGR_DCIN	CHGR_DCIN - @lio_lib.LIO	17D4 17D7
CHGR_EN	CHGR_EN - @lio_lib.LIO	17C4 17C7
CHGR_ICM	CHGR_ICM - @lio_lib.LIO	17D5
CHGR_ICM_R	CHGR_ICM_R - @lio_lib.LIO	17D6
CHGR_ICOMP	CHGR_ICOMP - @lio_lib.LIO	17D6
CHGR_LGATE	CHGR_LGATE - @lio_lib.LIO	17C4
CHGR_PHASE	CHGR_PHASE - @lio_lib.LIO	17C4
CHGR_PHASE_R	CHGR_PHASE_R - @lio_lib.LIO	17C4
CHGR_SGATE	CHGR_SGATE - @lio_lib.LIO	17D4
CHGR_SGND	CHGR_SGND - @lio_lib.LIO	17A7 17A7 17B8 17C6 17C7 17C8 17D5
CHGR_UGATE	CHGR_UGATE - @lio_lib.LIO	17C4
CHGR_VCOMP	CHGR_VCOMP - @lio_lib.LIO	17D6
CHGR_VCOMP_C	CHGR_VCOMP_C - @lio_lib.LIO	17D6
CHGR_VDD	CHGR_VDD - @lio_lib.LIO	17C8 17D5 17D7
CHGR_VDDP	CHGR_VDDP - @lio_lib.LIO	17C2 17D5
CHGR_VREF	CHGR_VREF - @lio_lib.LIO	17B8 17C6
CHGR_VREF_VF	CHGR_VREF_VF - @lio_lib.LIO	17A7 17B7 17B7
CHG_EN_DIV2_L	CHG_EN_DIV2_L - @lio_lib.LIO	17A5
CHG_EN_DIV_L	CHG_EN_DIV_L - @lio_lib.LIO	17A4
CODEC_DVDD	CODEC_DVDD - @lio_lib.LIO	10D5
CODEC_SDATA_IN	CODEC_SDATA_IN - @lio_lib.LIO	10C5
EXCARD_CLKREQ_CONN	EXCARD_CLKREQ_CONN - @lio_lib.LIO	6B3
EXCARD_CLKREQ_CONN_L	EXCARD_CLKREQ_CONN_L - @lio_lib.LIO	6A4 6C3
EXCARD_CLKREQ_L	EXCARD_CLKREQ_L - @lio_lib.LIO	4C6 6B2 7C6
EXCARD_CPPE_L	EXCARD_CPPE_L - @lio_lib.LIO	6A8 6C3 6C3
EXCARD_CPUSB_L	EXCARD_CPUSB_L - @lio_lib.LIO	6A8 6C3 6C3
EXCARD_OC_L	EXCARD_OC_L - @lio_lib.LIO	4C6 6C7 7C6
EXCARD_RCLKEN	EXCARD_RCLKEN - @lio_lib.LIO	6B3 6C5
EXCARD_SHDN_L_R	EXCARD_SHDN_L_R - @lio_lib.LIO	6C6
GND_5VS3_3VS3_SGND	GND_5VS3_3VS3_SGND - @lio_lib.LIO	16A6
GND_ADAPTER_UF	GND_ADAPTER_UF - @lio_lib.LIO	15D7
GND_AUDIO_HPAMP_PGND	GND_AUDIO_HPAMP_PGND - @lio_lib.LIO	11C6
HDA_BITCLK	HDA_BITCLK - @lio_lib.LIO	7B6 10D7
HDA_RST_L	HDA_RST_L - @lio_lib.LIO	7B3 10C7
HDA_SDIN0	HDA_SDIN0 - @lio_lib.LIO	7B6 10C7
HDA_SDOUT	HDA_SDOUT - @lio_lib.LIO	7B6 10D7
HDA_SYNC	HDA_SYNC - @lio_lib.LIO	7B6 10D7
HS_MIC_BIAS	HS_MIC_BIAS - @lio_lib.LIO	14B4
HS_MIC_HI	HS_MIC_HI - @lio_lib.LIO	13D3 14B3
HS_MIC_LO	HS_MIC_LO - @lio_lib.LIO	13D3 14B3
HS_MIC_SUPBIAS	HS_MIC_SUPBIAS - @lio_lib.LIO	14A4
HS_MIC_SW_RC	HS_MIC_SW_RC - @lio_lib.LIO	14A4
IPHS_SW_INT_TO_SB	IPHS_SW_INT_TO_SB - @lio_lib.LIO	7B3 14A3
IPHS_SW_SUPBIAS_EN_L	IPHS_SW_SUPBIAS_EN_L - @lio_lib.LIO	7B6 14A5
LCDBKLT_PWM	LCDBKLT_PWM - @lio_lib.LIO	19C4
LCDBKLT_PWM_RSTGATED	LCDBKLT_PWM_RSTGATED - @lio_lib.LIO	19A6
LCDBKLT_PWREN_L	LCDBKLT_PWREN_L - @lio_lib.LIO	19C6
LCDBKLT_PWREN_SW_L	LCDBKLT_PWREN_SW_L - @lio_lib.LIO	19B6
LDO_FDBK	LDO_FDBK - @lio_lib.LIO	17B5
LDO_OUT	LDO_OUT - @lio_lib.LIO	17B5
LEFT_USB_EMI_N	LEFT_USB_EMI_N - @lio_lib.LIO	8C4
LEFT_USB_EMI_P	LEFT_USB_EMI_P - @lio_lib.LIO	8C4
LEFT_USB_N	LEFT_USB_N - @lio_lib.LIO	4A3 8C4
	USB2_LT_N - @lio_lib.LIO	4A6 7C3
LEFT_USB_OC_L	LEFT_USB_OC_L - @lio_lib.LIO	4A3 8C7
	LTUSB_OC_L - @lio_lib.LIO	4A6 7C6
LEFT_USB_P	LEFT_USB_P - @lio_lib.LIO	4B3 8C4
	USB2_LT_P - @lio_lib.LIO	4B6 7C3
LIO_BATT_ISENSE	LIO_BATT_ISENSE - @lio_lib.LIO	7C6 9C6
LIO_DCIN_ISENSE	LIO_DCIN_ISENSE - @lio_lib.LIO	7B6 9C2
LIO_P3V3S0_EN_R_L	LIO_P3V3S0_EN_R_L - @lio_lib.LIO	16A3
LIO_P5VS0_EN_R_L	LIO_P5VS0_EN_R_L - @lio_lib.LIO	16A8
LIO_PP3V3_S3_EN	LIO_PP3V3_S3_EN - @lio_lib.LIO	16C7 16C7
LIO_PP5V_S3_EN	LIO_PP5V_S3_EN - @lio_lib.LIO	16C7 16C7
MAX9705L_NIN	MAX9705L_NIN - @lio_lib.LIO	12C6
MAX9705L_PIN	MAX9705L_PIN - @lio_lib.LIO	12C6
MAX9705R_NIN	MAX9705R_NIN - @lio_lib.LIO	12A6
MAX9705R_PIN	MAX9705R_PIN - @lio_lib.LIO	12A6
MAX9724_C1N	MAX9724_C1N - @lio_lib.LIO	11C4
MAX9724_C1P	MAX9724_C1P - @lio_lib.LIO	11C4
MAX9724_PVSS	MAX9724_PVSS - @lio_lib.LIO	11C4
MINI_CLKREQ_L	MINI_CLKREQ_L - @lio_lib.LIO	4B6 5C6 7C6
NC_AUD_BI_PORT_E_L	NC_AUD_BI_PORT_E_L - @lio_lib.LIO	10C3
NC_AUD_BI_PORT_E_R	NC_AUD_BI_PORT_E_R - @lio_lib.LIO	10C3
NC_AUD_BI_PORT_G_L	NC_AUD_BI_PORT_G_L - @lio_lib.LIO	10C3
NC_AUD_BI_PORT_G_R	NC_AUD_BI_PORT_G_R - @lio_lib.LIO	10C3
NC_AUD_BI_PORT_H_L	NC_AUD_BI_PORT_H_L - @lio_lib.LIO	10C3
NC_AUD_BI_PORT_H_R	NC_AUD_BI_PORT_H_R - @lio_lib.LIO	10C3
NC_AUD_VREF_PORT_B2	NC_AUD_VREF_PORT_B2 - @lio_lib.LIO	10C3
NC_AUD_VREF_PORT_C	NC_AUD_VREF_PORT_C - @lio_lib.LIO	10C3
NC_AUD_VREF_PORT_E	NC_AUD_VREF_PORT_E - @lio_lib.LIO	10C3
NC_BAL_IN_COM	NC_BAL_IN_COM - @lio_lib.LIO	10C5
NC_BAL_IN_L	NC_BAL_IN_L - @lio_lib.LIO	10C5
NC_BAL_IN_R	NC_BAL_IN_R - @lio_lib.LIO	10C5
NC_CHGR_BGATE	NC_CHGR_BGATE - @lio_lib.LIO	17D4
NC_LED_WLAN_L	NC_LED_WLAN_L - @lio_lib.LIO	5B3
NC_LED_WPAN_L	NC_LED_WPAN_L - @lio_lib.LIO	5B3
NC_LED_WWAN_L	NC_LED_WWAN_L - @lio_lib.LIO	5B3
NC_LIO_P3V3S3_PGOOD	NC_LIO_P3V3S3_PGOOD - @lio_lib.LIO	16B5
NC_LIO_P5VS3_PGOOD	NC_LIO_P5VS3_PGOOD - @lio_lib.LIO	16B5
NC_UIM_CLK	NC_UIM_CLK - @lio_lib.LIO	5C3
NC_UIM_DATA	NC_UIM_DATA - @lio_lib.LIO	5C3
NC_UIM_PWR	NC_UIM_PWR - @lio_lib.LIO	5C3
NC_UIM_RESET	NC_UIM_RESET - @lio_lib.LIO	5C3
NC_UIM_VPP	NC_UIM_VPP - @lio_lib.LIO	5C3
NC_VRP	NC_VRP - @lio_lib.LIO	10B3
NC_W_DISABLE_L	NC_W_DISABLE_L - @lio_lib.LIO	5C3
ONEWIRE_DCIN_DIV	ONEWIRE_DCIN_DIV - @lio_lib.LIO	15C5
ONEWIRE_EN	ONEWIRE_EN - @lio_lib.LIO	15C3
ONEWIRE_ESD	ONEWIRE_ESD - @lio_lib.LIO	15C4
ONEWIRE_OVERVOLT	ONEWIRE_OVERVOLT - @lio_lib.LIO	15C4
ONEWIRE_PWR_EN_L	ONEWIRE_PWR_EN_L - @lio_lib.LIO	15C2
ONEWIRE_PWR_EN_L_DIV	ONEWIRE_PWR_EN_L_DIV - @lio_lib.LIO	15C2
P3V3S3_BOOT	P3V3S3_BOOT - @lio_lib.LIO	16B3 16B6
P3V3S3_LG	P3V3S3_LG - @lio_lib.LIO	16B3
P3V3S3_PHASE	P3V3S3_PHASE - @lio_lib.LIO	16C3
P3V3S3_UG	P3V3S3_UG - @lio_lib.LIO	16B3
P3V3WLAN_SS	P3V3WLAN_SS - @lio_lib.LIO	5C2
P3VS3_VO2	P3VS3_VO2 - @lio_lib.LIO	16B6
P5VS3_BOOT	P5VS3_BOOT - @lio_lib.LIO	16C3 16C6
P5VS3_CS1	P5VS3_CS1 - @lio_lib.LIO	16C6
P5VS3_CS2	P5VS3_CS2 - @lio_lib.LIO	16C6
P5VS3_LG	P5VS3_LG - @lio_lib.LIO	16C3
P5VS3_PHASE	P5VS3_PHASE - @lio_lib.LIO	16C3
P5VS3_UG	P5VS3_UG - @lio_lib.LIO	16C3
P5VS3_V5FILT	P5VS3_V5FILT - @lio_lib.LIO	16B6 16C5 16C6
P5VS3_VO1	P5VS3_VO1 - @lio_lib.LIO	16B6
P5VS3_VREF	P5VS3_VREF - @lio_lib.LIO	16C5 16C7
P5VS3_VREG3	P5VS3_VREG3 - @lio_lib.LIO	16C5
P5VS3_VREG5	P5VS3_VREG5 - @lio_lib.LIO	16C5
PBUS_LDO_EN	PBUS_LDO_EN - @lio_lib.LIO	7B3 17B7
PCIE_CLK100M_EXCARD_N	PCIE_CLK100M_EXCARD_N - @lio_lib.LIO	4D6 6C3 7B2
PCIE_CLK100M_EXCARD_P	PCIE_CLK100M_EXCARD_P - @lio_lib.LIO	4D6 6C3 7B2
PCIE_CLK100M_EXCARD_UF_N	PCIE_CLK100M_EXCARD_UF_N - @lio_lib.LIO	4D6 7B4
PCIE_CLK100M_EXCARD_UF_P	PCIE_CLK100M_EXCARD_UF_P - @lio_lib.LIO	4D6 7B4
PCIE_CLK100M_MINI_N	PCIE_CLK100M_MINI_N - @lio_lib.LIO	4B6 5C6 7C2
PCIE_CLK100M_MINI_P	PCIE_CLK100M_MINI_P - @lio_lib.LIO	4B6 5C6 7C2
PCIE_CLK100M_MINI_UF_N	PCIE_CLK100M_MINI_UF_N - @lio_lib.LIO	4B6 7C4
PCIE_CLK100M_MINI_UF_P	PCIE_CLK100M_MINI_UF_P - @lio_lib.LIO	4B6 7C4
PCIE_EXCARD_D2R_N	PCIE_EXCARD_D2R_N - @lio_lib.LIO	4D6 6C3 7B3
PCIE_EXCARD_D2R_P	PCIE_EXCARD_D2R_P - @lio_lib.LIO	4D6 6C3 7B3
PCIE_EXCARD_R2D_N	PCIE_EXCARD_R2D_N - @lio_lib.LIO	4C6 6C3 7B3
PCIE_EXCARD_R2D_P	PCIE_EXCARD_R2D_P - @lio_lib.LIO	4D6 6C3 7B3
PCIE_MINI_D2R_N	PCIE_MINI_D2R_N - @lio_lib.LIO	4B6 5C6 7C3
PCIE_MINI_D2R_P	PCIE_MINI_D2R_P - @lio_lib.LIO	4B6 5C6 7C3
PCIE_MINI_R2D_N	PCIE_MINI_R2D_N - @lio_lib.LIO	4C6 5B6 7C3
PCIE_MINI_R2D_P	PCIE_MINI_R2D_P - @lio_lib.LIO	4C6 5B6 7B3
PCIE_WAKE_EXCARD_L	PCIE_WAKE_EXCARD_L - @lio_lib.LIO	4C3 6C3
	PCIE_WAKE_L - @lio_lib.LIO	4C6 7C3
	PCIE_WAKE_MINI_L - @lio_lib.LIO	4C3 5C6
	PCIE_WAKE_L - @lio_lib.LIO	4C6 7C3
PGND1	PGND1 - @lio_lib.LIO	16B6
PGND2	PGND2 - @lio_lib.LIO	16B6
PLT_RESET_SWITCH_L	PLT_RESET_SWITCH_L - @lio_lib.LIO	6C3 6C3
PM_WLAN_EN_L	PM_WLAN_EN_L - @lio_lib.LIO	5C1 7B3
PP1V5_S0_EXCARD_SWITCH	PP1V5_S0_EXCARD_SWITCH - @lio_lib.LIO	6C3 6C3
PP3V3_S0_AUDIO_F	PP3V3_S0_AUDIO_F - @lio_lib.LIO	14A5 14A6 14B8 14C8 14C8
PP3V3_S0_EXCARD_SWITCH	PP3V3_S0_EXCARD_SWITCH - @lio_lib.LIO	6C3 6C3
PP3V3_S3_EXCARD_SWITCH	PP3V3_S3_EXCARD_SWITCH - @lio_lib.LIO	6C3 6C3
PP3V3_WLAN	PP3V3_WLAN - @lio_lib.LIO	5D4
PP4V5_AUDIO_ANALOG	PP4V5_AUDIO_ANALOG - @lio_lib.LIO	10A3 10D2
PP5V_AUDIO_HPAMP_PVDD_F	PP5V_AUDIO_HPAMP_PVDD_F - @lio_lib.LIO	11D6
PP5V_PWRON_USB_EMI	PP5V_PWRON_USB_EMI - @lio_lib.LIO	8C3
PP5V_S0_AUDIO_F	PP5V_S0_AUDIO_F - @lio_lib.LIO	12B8 12C6
PP5V_S3_USB_SWITCH	PP5V_S3_USB_SWITCH - @lio_lib.LIO	8C5
PP5V_SW_LCDBKLT	PP5V_SW_LCDBKLT - @lio_lib.LIO	19C5
PP18V5_DCIN	PP18V5_DCIN - @lio_lib.LIO	15B8 15D1
PP18V5_DCIN_FUSE	PP18V5_DCIN_FUSE - @lio_lib.LIO	15D6
PP18V5_DCIN_ONEWIRE	PP18V5_DCIN_ONEWIRE - @lio_lib.LIO	15D5
PP18V5_DCIN_UF	PP18V5_DCIN_UF - @lio_lib.LIO	15D7
PPBUS_S0_LCDBKLT_EN_DIV	PPBUS_S0_LCDBKLT_EN_DIV - @lio_lib.LIO	19D5
PPBUS_S0_LCDBKLT_EN_L	PPBUS_S0_LCDBKLT_EN_L - @lio_lib.LIO	19C6
PPBUS_S0_LCDBKLT_FUSED	PPBUS_S0_LCDBKLT_FUSED - @lio_lib.LIO	19D6
PPBUS_S0_LCDBKLT_SW	PPBUS_S0_LCDBKLT_SW - @lio_lib.LIO	19C5
PPDCIN_G3H_LIO_CONN_R	PPDCIN_G3H_LIO_CONN_R - @lio_lib.LIO	15D4
PPVBATT_G3H_DIO	PPVBATT_G3H_DIO - @lio_lib.LIO	17B3
PPVBATT_G3H_FET	PPVBATT_G3H_FET - @lio_lib.LIO	17B3
PPVBATT_G3H_FET_F	PPVBATT_G3H_FET_F - @lio_lib.LIO	17B2
PPVBATT_G3H_FET_GATE	PPVBATT_G3H_FET_GATE - @lio_lib.LIO	17A2
PPVBATT_G3H_PRE	PPVBATT_G3H_PRE - @lio_lib.LIO	17B4
PPVBAT_G3H_CHGR_OUT	PPVBAT_G3H_CHGR_OUT - @lio_lib.LIO	17B6 17C1
PPVDCIN_G3H_PRE	PPVDCIN_G3H_PRE - @lio_lib.LIO	17D4
PPVDCIN_G3H_R	PPVDCIN_G3H_R - @lio_lib.LIO	17D2
SMC_ADAPTER_EN	SMC_ADAPTER_EN - @lio_lib.LIO	7C6 15B6
SMC_BATT_CHG_EN	SMC_BATT_CHG_EN - @lio_lib.LIO	7C6 17A5
SMC_BATT_ISET	SMC_BATT_ISET - @lio_lib.LIO	7C6 17A8
SMC_BATT_ISET_L	SMC_BATT_ISET_L - @lio_lib.LIO	17A8
SMC_BATT_TRICKLE_EN_L	SMC_BATT_TRICKLE_EN_L - @lio_lib.LIO	7B6 17A2
SMC_BC_ACOK	SMC_BC_ACOK - @lio_lib.LIO	7B6 15A6 15B2 17A5
SMC_BC_ACOK_R	SMC_BC_ACOK_R - @lio_lib.LIO	15A6
SMC_EXCARD_CP	SMC_EXCARD_CP - @lio_lib.LIO	6A6 7B6
SMC_EXCARD_PWR_EN	SMC_EXCARD_PWR_EN - @lio_lib.LIO	6C7 7B6
SMC_SYS_ISET	SMC_SYS_ISET - @lio_lib.LIO	7C6 17A8
SMC_SYS_ISET_L	SMC_SYS_ISET_L - @lio_lib.LIO	17A8
SPKRAMP_L_N_OUT	SPKRAMP_L_N_OUT - @lio_lib.LIO	12C3 12C3
SPKRAMP_L_P_OUT	SPKRAMP_L_P_OUT - @lio_lib.LIO	12C3 12C3
SPKRAMP_R_N_OUT	SPKRAMP_R_N_OUT - @lio_lib.LIO	12A3 12B3
SPKRAMP_R_P_OUT	SPKRAMP_R_P_OUT - @lio_lib.LIO	12A3 12B3
SPKRAMP_SYNC1	SPKRAMP_SYNC1 - @lio_lib.LIO	12A4 12C3
SPKRCONN_L_N_OUT	SPKRCONN_L_N_OUT - @lio_lib.LIO	12C1 13C2
SPKRCONN_L_P_OUT	SPKRCONN_L_P_OUT - @lio_lib.LIO	12C1 13C2
SPKRCONN_R_N_OUT	SPKRCONN_R_N_OUT - @lio_lib.LIO	12B1 13C2
SPKRCONN_R_P_OUT	SPKRCONN_R_P_OUT - @lio_lib.LIO	12B1 13C2
SPKR_SHIELD	SPKR_SHIELD - @lio_lib.LIO	13C2
SW_SUPBIAS_EN_R	SW_SUPBIAS_EN_R - @lio_lib.LIO	14A4
SYS_ONEWIRE	SYS_ONEWIRE - @lio_lib.LIO	7C6 15C1
SYS_ONEWIRE_BILAT	SYS_ONEWIRE_BILAT - @lio_lib.LIO	15C2
TCHG_EN_DIV2_L	TCHG_EN_DIV2_L - @lio_lib.LIO	17A4
TCHG_EN_DIV_L	TCHG_EN_DIV_L - @lio_lib.LIO	17A4
TONSEL	TONSEL - @lio_lib.LIO	16C6
TP_CHGR_DCPRN	TP_CHGR_DCPRN - @lio_lib.LIO	17C4
TP_CHGR_DCSET	TP_CHGR_DCSET - @lio_lib.LIO	17C4
TP_CHGR_VADJ	TP_CHGR_VADJ - @lio_lib.LIO	17D6
TP_EXCARD_STBY_L	TP_EXCARD_STBY_L - @lio_lib.LIO	6C7
USB2_EXCARD_N	USB2_EXCARD_N - @lio_lib.LIO	4D6 6C3 7C3
USB2_EXCARD_P	USB2_EXCARD_P - @lio_lib.LIO	4D6 6C3 7C3
USB2_MINI_EMI_N	USB2_MINI_EMI_N - @lio_lib.LIO	5B4
USB2_MINI_EMI_P	USB2_MINI_EMI_P - @lio_lib.LIO	5B4
USB2_MINI_N	USB2_MINI_N - @lio_lib.LIO	4B6 5B2 7B3
USB2_MINI_P	USB2_MINI_P - @lio_lib.LIO	4B6 5B2 7B3

Title: Cref Part Report
Design: lio
Date: Oct 5 17:43:38 2007

C3400	CAP_402	lio[5C3]
C3401	CAP_603	lio[5C3]
C3410	CAP_603	lio[5C3]
C3411	CAP_402	lio[5C3]
C3420	CAP_603	lio[5C3]
C3421	CAP_402	lio[5C3]
C3422	CAP_402	lio[5C3]
C3450	CAP_402	lio[5C3]
C3451	CAP_402	lio[5C2]
C3500	CAP_402	lio[6C4]
C3501	CAP_402	lio[6C4]
C3502	CAP_402	lio[6C4]
C3503	CAP_603	lio[6C4]
C3504	CAP_603	lio[6C4]
C3505	CAP_603	lio[6C4]
C3530	CAP_402	lio[6C8]
C3531	CAP_603	lio[6C7]
C3534	CAP_402	lio[6C8]
C3535	CAP_603	lio[6C7]
C3550	CAP_402	lio[6A7]
C3560	CAP_402	lio[6A3]
C4600	CAP_603	lio[8B6]
C4601	CAP_402	lio[8B7]
C4602	CAP_603	lio[8B5]
C4603	CAP_P_B2	lio[8B5]
C4650	CAP_402	lio[8C4]
C5705	CAP_402	lio[9C3]
C5715	CAP_402	lio[9C7]
C5750	CAP_402	lio[9B4]
C6200	CAP_402-LF	lio[10D5]
C6201	CAP_402	lio[10D5]
C6203	CAP_402	lio[10D5]
C6204	CAP_P_B2	lio[10D3]
C6205	CAP_P_B2	lio[10A3]
C6206	CAP_402	lio[10D3]
C6207	CAP_402	lio[10D3]
C6208	CAP_603	lio[10A5]
C6209	CAP_402	lio[10A5]
C6210	CAP_402	lio[10A6]
C6211	CAP_402	lio[10A4]
C6220	CAP_402	lio[10B5]
C6221	CAP_P_SMA-HF	lio[10B3]
C6222	CAP_402	lio[10B3]
C6500	CAP_0805	lio[11D5]
C6501	CAP_402	lio[11D5]
C6502	CAP_0805	lio[11C4]
C6503	CAP_402	lio[11C5]
C6504	CAP_402	lio[11C4]
C6510	CAP_P_SMA-HF	lio[11B6]
C6511	CAP_402	lio[11B4]
C6512	CAP_603	lio[11B5]
C6520	CAP_P_SMA-HF	lio[11A6]
C6521	CAP_402	lio[11A4]
C6522	CAP_603	lio[11A5]
C6610	CAP_402	lio[12C5]
C6611	CAP_402	lio[12C4]
C6612	CAP_P_CASE-B2	lio[12C4]
C6613	CAP_402	lio[12C6]
C6614	CAP_402	lio[12C6]
C6620	CAP_402	lio[12B5]
C6621	CAP_402	lio[12B5]
C6622	CAP_P_CASE-B2	lio[12B5]
C6623	CAP_402	lio[12A6]
C6624	CAP_402	lio[12A6]
C6700	CAP_402	lio[13C7]
C6705	CAP_402	lio[13C5]
C6750	CAP_402	lio[13A7]
C6751	CAP_603	lio[13A7]
C6756	CAP_402	lio[13A5]
C6800	CAP_402	lio[14A7]
C6801	CAP_402	lio[14C7]
C6802	CAP_402	lio[14B7]
C6811	CAP_402	lio[14A7]
C6832	CAP_0805	lio[14D2]
C6833	CAP_0805	lio[14D2]
C6840	CAP_402	lio[14B4]
C6841	CAP_402	lio[14B4]
C6842	CAP_402	lio[14B4]
C6843	CAP_603	lio[14B4]
C6844	CAP_402	lio[14A4]
C6845	CAP_402	lio[14A4]
C6850	CAP_402	lio[14C3]
C6851	CAP_402	lio[14C2]
C6852	CAP_402	lio[14C2]
C6853	CAP_603	lio[14C3]
C6900	CAP_805	lio[15C6]
C6903	CAP_402	lio[15C6]
C6904	CAP_402	lio[15D6]
C6905	CAP_402	lio[15D4]
C6906	CAP_402	lio[15C2]
C6910	CAP_402	lio[15B7]
C6911	CAP_402	lio[15A7]
C6912	CAP_402	lio[15A6]
C6950	CAP_603	lio[15B5]
C7600	CAP_603	lio[16C2]
C7601	CAP_805-2	lio[16C1]
C7602	CAP_P_CASE-C2-SM	lio[16C1]
C7603	CAP_402	lio[16C3]
C7610	CAP_402	lio[16A7]
C7620	CAP_603	lio[16C6]
C7621	CAP_402	lio[16C7]
C7622	CAP_603	lio[16B5]
C7623	CAP_603	lio[16B5]
C7624	CAP_402	lio[16B4]
C7625	CAP_P_CASE-D2-LF	lio[16C3]
C7650	CAP_603	lio[16B2]
C7651	CAP_603	lio[16B1]
C7652	CAP_P_CASE-C2-SM	lio[16B1]
C7653	CAP_402	lio[16B3]
C7660	CAP_402	lio[16A3]
C7670	CAP_402	lio[16C7]
C7671	CAP_402	lio[16C7]
C7900	CAP_402	lio[17C6]
C7901	CAP_402	lio[17D6]
C7902	CAP_402	lio[17C6]
C7903	CAP_603	lio[17C4]
C7904	CAP_402	lio[17D4]
C7905	CAP_P_CASE-D2-LF	lio[17D2]
C7906	CAP_P_CASE-D2-LF	lio[17D2]
C7907	CAP_603	lio[17D6]
C7908	CAP_P_CASE-D2-LF	lio[17C2]
C7910	CAP_603	lio[17C1]
C7911	CAP_402	lio[17D5]
C7912	CAP_402	lio[17D4]
C7915	CAP_402	lio[17C6]
C7916	CAP_805	lio[17D3]
C7917	CAP_805	lio[17D2]
C7920	CAP_402	lio[17B5]
C7921	CAP_402	lio[17B5]
C7922	CAP_402	lio[17B5]
C7924	CAP_402	lio[17A4]
C7925	CAP_402	lio[17B4]
C7927	CAP_402	lio[17B1]
C7940	CAP_603	lio[17D7]
C7941	CAP_402	lio[17C7]
C7950	CAP_603	lio[17B6]
C7951	CAP_603	lio[17B4]
C7961	CAP_402	lio[17A7]
C7962	CAP_402	lio[17A7]
C7970	CAP_603	lio[17C4]
C7971	CAP_402	lio[17A2]
C7980	CAP_402	lio[17B7]
C7990	CAP_402	lio[17C6]
C9800	CAP_402	lio[19A7]
C9801	CAP_402	lio[19A5]
C9802	CAP_402	lio[19D6]
C9805	CAP_402	lio[19C6]
C9807	CAP_402	lio[19B5]
C9892	CAP_402	lio[19C3]
C9893	CAP_402	lio[19C3]
C9894	CAP_402	lio[19B3]
D4600	DIODE_SCHOT_3P_A_SC-75	lio[8B3]
D6900	RCLAMP2402B_SC-75	lio[15C7]
D6901	DIODE_SOD-323	lio[15D5]
D7900	DIODE_SCHOT_SOD-123	lio[17C3]
D7903	ZENER_SOT23	lio[17C4]
D7921	DIODE_SOD-323	lio[17B3]
D7940	DIODE_3P_CA_SOT-523-3	lio[17D7]
D7950	DIODE_3P_C1_SOT-323	lio[17B5]
DZ6702	SUPPR_TRANSIENT1_402	lio[13C5]
DZ6703	SUPPR_TRANSIENT1_402	lio[13C5]
DZ6704	SUPPR_TRANSIENT1_402	lio[13C5]
DZ6705	SUPPR_TRANSIENT1_402	lio[13C6]
DZ6706	SUPPR_TRANSIENT1_402	lio[13C6]
DZ6752	SUPPR_TRANSIENT1_402	lio[13A6]
DZ6753	SUPPR_TRANSIENT1_402	lio[13A6]
DZ6754	SUPPR_TRANSIENT1_402	lio[13A5]
DZ6755	SUPPR_TRANSIENT1_402	lio[13A5]
F6900	FUSE_1206-1	lio[15D5]
F7902	FUSE_1206-1	lio[17B2]
F9800	FUSE_603	lio[19D6]
FL3600	FILTER_4P_1210-4SM1	lio[7C3]
FL3601	FILTER_4P_1210-4SM1	lio[7B3]
J3400	CON_F52RT_D2MT_SM_F-ST-SM	lio[5C5]
J3500	CON_F26RT_S4MT_SM_M75_F-RT-SM	lio[6D2]
J3600	CON_M80ST_D4MT_SM_M-ST-SM	lio[7C4]
J4600	CON_F4RT_USB_S2MT_TH_F-RT-TH-USB-LFT	lio[8C2]
J6700	CON_F9RT_SPDIFTRAN_TH_F-RT-TH	lio[13C8]
J6750	CON_F8RT_SPDIFRCVR_TH2_F-RT-TH	lio[13B8]
J6780	CON_M8ST_S_TH_M-ST-TH	lio[13C1]
J6900	CON_F5RT_S2MT_TH3_F-RT-TH-MG3	lio[15D8]
J6915	CON_M12ST_S_SM_M-ST-SM	lio[15A4]
J9050	CON_F5ST_S2MT_SM_F-ST-SM	lio[18C5]
L3400	FILTER_4P_1210-4SM1	lio[5B2]
L4600	FILTER_4P2_DLP11S	lio[8C4]
L4601	IND_0603	lio[8C4]
L6200	IND_0402	lio[10A6]
L6201	IND_0402	lio[10D6]
L6202	IND_0402	lio[10D3]
L6500	IND_0402	lio[11D6]
L6501	IND_0402	lio[11C6]
L6601	IND_0402	lio[12C7]
L6610	IND_0402	lio[12C7]
L6620	IND_0402	lio[12A7]
L6701	IND_0603	lio[13C4]
L6702	IND_0402	lio[13D4]
L6703	IND_0402	lio[13D4]
L6704	IND_0402	lio[13C4]
L6705	IND_0402	lio[13C4]
L6706	IND_0402	lio[13C4]
L6751	IND_0402	lio[13B4]
L6752	IND_0402	lio[13A4]
L6754	IND_0402	lio[13B4]
L6756	IND_0402	lio[13A4]
L6758	IND_0402	lio[13A4]
L6800	IND_0402	lio[14A7]
L6900	FILTER_4P_SM	lio[15D7]
L6901	IND_SM-1	lio[15D7]
L7600	IND_IHLP2525CZ-SM	lio[16C2]
L7650	IND_IHLP2525CZ-SM	lio[16B2]
L7900	IND_3P_FDA1254-SM	lio[17C2]
L9891	IND_0402	lio[19C4]
L9893	IND_0402	lio[19C4]
L9894	IND_0402	lio[19C4]
Q3450	TRA_SINGLE_MOSFET_PCHN_SOT-23	lio[5D2]
Q6800	TRA_DUAL_SSM6N15FE_SOT563	lio[14B7 14C7]
Q6801	TRA_DUAL_SSM6N15FE_SOT563	lio[14C5 14C6]
Q6802	TRA_SSM3K15FV_SOD-VESM	lio[14B7]
Q6840	TRA_SSM3K15FV_SOD-VESM	lio[14A3]
Q6841	TRA_SSM3J16FV_SOD-VESM	lio[14A4]
Q6900	TRA_DUAL_SSM6N15FE_SOT563	lio[15C1 15C3]
Q6901	TRA_DUAL_SSM6N15FE_SOT563	lio[15C1 15C2]
Q6909	TRA_DUAL_BSS84V_SOT-563	lio[15D2]
Q6910	TRA_SSM3K15FV_SOD-VESM	lio[15B4]
Q6950	TRA_SI4413ADY_SO-8	lio[15B4]
Q7600	TRA_FDMS9600S_MLP	lio[16C3]
Q7610	TRA_FDC697P_SOT-6	lio[16A7]
Q7611	TRA_FDC697P_SOT-6	lio[16A3]
Q7650	TRA_FDMS9600S_MLP	lio[16B2]
Q7900	TRA_SI4413ADY_SO-8	lio[17D4]
Q7901	TRA_RJK_LFPAK	lio[17C3]
Q7902	TRA_RJK_LFPAK	lio[17C3]
Q7920	TRA_SI4413ADY_SO-8	lio[17B4]
Q7921	TRA_SI4413ADY_SO-8	lio[17B3]
Q7922	TRA_DUAL_SSM6N15FE_SOT563	lio[17A4 17A4]
Q7924	TRA_DUAL_SSM6N15FE_SOT563	lio[17A3 17A5]
Q7940	TRA_IRLML5203_SM	lio[17D7]
Q7950	TRA_SSM3K15FV_SOD-VESM	lio[17C7]
Q7960	TRA_DUAL_SSM6N15FE_SOT563	lio[17A7 17A8]
Q7961	TRA_DUAL_SSM6N15FE_SOT563	lio[17A7 17A8]
Q7970	TRA_SI4413ADY_SO-8	lio[17B2]
Q9805	TRA_DUAL_NPCH_NTZD3155C1_SOT-563	lio[19B6 19C6]
Q9806	TRA_FDMA530PZ_MICROFET	lio[19D5]
Q9807	TRA_SSM3K15FV_SOD-VESM	lio[19C6]
R3450	RES_402	lio[5C2]
R3451	RES_402	lio[5C2]
R3500	RES_402	lio[6C6]
R3561	RES_402	lio[6B3]
R6201	RES_402	lio[10B5]
R6203	RES_402	lio[10D3]
R6204	RES_402	lio[10C6]
R6205	RES_402	lio[10B5]
R6206	RES_402	lio[10B3]
R6207	RES_402	lio[10B2]
R6220	RES_402	lio[10A6]
R6221	RES_402	lio[10A4]
R6222	RES_402	lio[10A4]
R6250	RES_402	lio[10C5]
R6251	RES_402	lio[10D6]
R6500	RES_402	lio[11C5]
R6510	RES_402	lio[11B5]
R6511	RES_402	lio[11B4]
R6512	RES_402	lio[11B4]
R6513	RES_603	lio[11C3]
R6514	RES_402	lio[11C4]
R6520	RES_402	lio[11A5]
R6521	RES_402	lio[11A4]
R6522	RES_402	lio[11A4]
R6523	RES_603	lio[11C3]
R6524	RES_402	lio[11C3]
R6601	RES_402	lio[12C7]
R6602	RES_402	lio[12C4]
R6603	RES_402	lio[12C7]
R6610	RES_402	lio[12C2]
R6611	RES_402	lio[12C2]
R6620	RES_402	lio[12B2]
R6621	RES_402	lio[12B2]
R6700	RES_402	lio[13C4]
R6749	RES_402	lio[13B7]
R6780	RES_402	lio[13C2]
R6790	RES_402	lio[13B2]
R6791	RES_402	lio[13B5]
R6801	RES_402	lio[14C7]
R6802	RES_402	lio[14C7]
R6803	RES_402	lio[14C7]
R6805	RES_402	lio[14C5]
R6806	RES_402	lio[14C6]
R6811	RES_402	lio[14B7]
R6812	RES_402	lio[14B7]
R6813	RES_402	lio[14B7]
R6836	RES_402	lio[14D2]
R6837	RES_402	lio[14D2]
R6840	RES_402	lio[14B4]
R6841	RES_402	lio[14A4]
R6842	RES_402	lio[14A4]
R6843	RES_402	lio[14A4]
R6845	RES_402	lio[14B4]
R6846	RES_402	lio[14A3]
R6850	RES_402	lio[14C2]
R6852	RES_402	lio[14C3]
R6855	RES_402	lio[14C3]
R6861	RES_402	lio[14B7]
R6900	RES_402	lio[15C2]
R6901	RES_402	lio[15D2]
R6902	RES_402	lio[15D5]
R6903	RES_402	lio[15C3]
R6904	RES_402	lio[15C7]
R6905	RES_402	lio[15D3]
R6907	RES_805	lio[15D4]
R6909	RES_402	lio[15D1]
R6911	RES_402	lio[15C2]
R6912	RES_402	lio[15B7]
R6913	RES_402	lio[15A7]
R6915	RES_402	lio[15A6]
R6916	RES_402	lio[15B6]
R6921	RES_402	lio[15B5]
R6950	RES_402	lio[15B4]
R6990	RES_402	lio[15C5]
R6991	RES_402	lio[15C4]
R7610	RES_402	lio[16A8]
R7620	RES_402	lio[16C5]
R7621	RES_402	lio[16C6]
R7622	RES_402	lio[16C7]
R7625	RES_402	lio[16C7]
R7660	RES_402	lio[16A4]
R7670	RES_402	lio[16C8]
R7900	RES_402	lio[17D5]
R7902	RES_402	lio[17D5]
R7903	RES_402	lio[17C3]
R7904	RES_402	lio[17C1]
R7905	RES_402	lio[17D3]
R7906	RES_402	lio[17B2]
R7907	RES_0612	lio[17D3]
R7908	RES_0612	lio[17C2]
R7910	RES_402	lio[17D4]
R7920	RES_2525-1	lio[17B3]
R7921	RES_805	lio[17B2]
R7922	RES_402	lio[17A4]
R7923	RES_402	lio[17A4]
R7924	RES_402	lio[17C8]
R7930	RES_402	lio[17B5]
R7931	RES_402	lio[17A5]
R7940	RES_402	lio[17D7]
R7941	RES_402	lio[17C7]
R7944	RES_402	lio[17C7]
R7950	RES_402	lio[17C8]
R7952	RES_402	lio[17B5]
R7953	RES_402	lio[17B5]
R7954	RES_402	lio[17B6]
R7960	RES_402	lio[17A7]
R7962	RES_402	lio[17A7]
R7963	RES_402	lio[17A7]
R7964	RES_402	lio[17A7]
R7966	RES_402	lio[17A7]
R7967	RES_402	lio[17A7]
R7968	RES_402	lio[17B7]
R7969	RES_402	lio[17A8]
R7970	RES_603	lio[17C4]
R7971	RES_402	lio[17A2]
R7972	RES_402	lio[17A2]
R7979	RES_402	lio[17A8]
R7992	RES_402	lio[17D5]
R9805	RES_402	lio[19C6]
R9806	RES_402	lio[19A6]
R9807	RES_402	lio[19B5]
R9808	RES_402	lio[19D6]
R9809	RES_402	lio[19D5]
R9810	RES_402	lio[19B6]
RX9892	RES_603	lio[19C4]
U3500	PWR_CNTRL_TPS2231_QFN	lio[6C5]
U3551	MC74VHC1G00_SC70-5	lio[6A6]
U3560	MC74VHC1G00_SC70-5	lio[6B2]
U3561	SN74LVC1G04_BGA	lio[6A3]
U4600	SWI_TPS2068_MSOP	lio[8C6]
U5705	INA193_SOT23-5	lio[9C3]
U5715	INA193_SOT23-5	lio[9C6]
U5750	TMP102_SOT563	lio[9B5]
U6200	AUDIO_ALC885B2_LQFP	lio[10D5]
U6201	LREG_TPS79501DRB_SON	lio[10A5]
U6500	MAX9724A_TQFN	lio[11D5]
U6610	MAX9705_TDFN1	lio[12C5]
U6620	MAX9705_TDFN1	lio[12B5]
U6900	TPS3808_SOT23-6	lio[15A7]
U6950	MC74VHC1G08_SC70	lio[15A5]
U6990	COMPARATOR_LM397_SOT23-5	lio[15C4]
U7600	TPS51120_LLP	lio[16C6]
U7670	74LVC2G07_SOT886	lio[16C8]
U7900	ISL6257_QFN	lio[17D5]
U7901	OPAMP_MAX4245_SC70-6	lio[17B8]
U7950	LREG_MAX8719_TDFN	lio[17C6]
U9800	MC74VHC1G08_SC70	lio[19A6]
U9801	MC74VHC1G08_SC70	lio[19A5]
XW6200	SHORT_SM	lio[10A6]
XW6202	SHORT_SM	lio[10A6]
XW6500	SHORT_SM	lio[11C6]
XW6501	SHORT_SM	lio[11C6]
XW6701	SHORT_SM	lio[13A3]
XW6710	SHORT_SM	lio[13B2]
XW6711	SHORT_SM	lio[13B2]
XW6712	SHORT_SM	lio[13B2]
XW6840	SHORT_SM	lio[14B4]
XW6850	SHORT_SM	lio[14C3]
XW6851	SHORT_SM	lio[14B3]
XW7600	SHORT_SM	lio[16A4]
XW7601	SHORT_SM	lio[16A6]
XW7602	SHORT_SM	lio[16A6]
XW7603	SHORT_SM	lio[16A6]
XW7604	SHORT_SM	lio[16A6]
XW7605	SHORT_SM	lio[16A6]
XW7606	SHORT_SM	lio[16A6]
XW7607	SHORT_SM	lio[16B6]
XW7608	SHORT_SM	lio[16B6]
XW7609	SHORT_SM	lio[16B6]
XW7610	SHORT_SM	lio[16B6]
XW7900	SHORT_SM	lio[17C5]
XW7901	SHORT_SM	lio[17D3]
XW7902	SHORT_SM	lio[17D3]
XW7903	SHORT_SM	lio[17C2]
XW7904	SHORT_SM	lio[17C2]
ZT0900	MTGHOLE	lio[4D3]
ZT0910	MTGHOLE	lio[4A8]
ZT0920	MTGHOLE	lio[4B8]
ZT0930	MTGHOLE	lio[4A8]

Title: Cref Part Report
Design: lio
Date: Jun 27 17:31:55 2007

C3400	CAP_402	lio[5C3]
C3401	CAP_603	lio[5C3]
C3410	CAP_603	lio[5C3]
C3411	CAP_402	lio[5C3]
C3420	CAP_603	lio[5C3]
C3421	CAP_402	lio[5C3]
C3422	CAP_402	lio[5C3]
C3450	CAP_402	lio[5C3]
C3451	CAP_402	lio[5C2]
C3500	CAP_402	lio[6C4]
C3501	CAP_402	lio[6C4]
C3502	CAP_402	lio[6C4]
C3503	CAP_603	lio[6C4]
C3504	CAP_603	lio[6C4]
C3505	CAP_603	lio[6C4]
C3530	CAP_402	lio[6C8]
C3531	CAP_603	lio[6C7]
C3534	CAP_402	lio[6C8]
C3535	CAP_603	lio[6C7]
C3550	CAP_402	lio[6A7]
C3560	CAP_402	lio[6A3]
C4600	CAP_603	lio[8B6]
C4601	CAP_402	lio[8B7]
C4602	CAP_603	lio[8C5]
C4603	CAP_P_B2	lio[8B5]
C4650	CAP_402	lio[8C3]
C4651	CAP_402	lio[8B3]
C5605	CAP_402	lio[9C3]
C5615	CAP_402	lio[9C7]
C5650	CAP_402	lio[9B4]
C6200	CAP_402	lio[10D6]
C6201	CAP_402	lio[10D6]
C6203	CAP_402	lio[10D6]
C6204	CAP_P_CASE-A3-LF	lio[10D4]
C6205	CAP_P_CASE-A3-LF	lio[10A3]
C6206	CAP_402	lio[10D4]
C6207	CAP_402	lio[10D3]
C6208	CAP_603	lio[10A5]
C6209	CAP_402	lio[10A5]
C6210	CAP_402	lio[10A5]
C6220	CAP_402	lio[10B6]
C6221	CAP_P_SMA-LF	lio[10B4]
C6222	CAP_402	lio[10B4]
C6500	CAP_0805	lio[11D5]
C6501	CAP_402	lio[11D5]
C6502	CAP_0805	lio[11C4]
C6503	CAP_402	lio[11C4]
C6504	CAP_603	lio[11C3]
C6510	CAP_P_SMA-LF	lio[11B6]
C6511	CAP_402	lio[11B4]
C6512	CAP_603	lio[11B4]
C6520	CAP_P_SMA-LF	lio[11A6]
C6521	CAP_402	lio[11A4]
C6522	CAP_603	lio[11B4]
C6610	CAP_402	lio[12C5]
C6611	CAP_402	lio[12C4]
C6612	CAP_P_CASE-B2	lio[12C4]
C6613	CAP_402	lio[12C6]
C6614	CAP_402	lio[12C6]
C6620	CAP_402	lio[12B5]
C6621	CAP_402	lio[12B5]
C6622	CAP_P_CASE-B2	lio[12B5]
C6623	CAP_402	lio[12A6]
C6624	CAP_402	lio[12A6]
C6700	CAP_402	lio[13C7]
C6705	CAP_402	lio[13C5]
C6750	CAP_402	lio[13A7]
C6751	CAP_603	lio[13A7]
C6756	CAP_402	lio[13A5]
C6800	CAP_402	lio[14A4]
C6801	CAP_402	lio[14C7]
C6802	CAP_402	lio[14B7]
C6811	CAP_402	lio[14A7]
C6832	CAP_0805	lio[14B2]
C6833	CAP_0805	lio[14B2]
C6850	CAP_402	lio[14C3]
C6851	CAP_402	lio[14C4]
C6852	CAP_402	lio[14C2]
C6853	CAP_603	lio[14D3]
C6900	CAP_805	lio[15C7]
C6901	CAP_805	lio[15D7]
C6903	CAP_402	lio[15C7]
C6904	CAP_402	lio[15D6]
C6905	CAP_402	lio[15D4]
C6906	CAP_402	lio[15C2]
C6910	CAP_402	lio[15B7]
C6911	CAP_402	lio[15A7]
C6912	CAP_402	lio[15A6]
C6950	CAP_603	lio[15B5]
C7600	CAP_603	lio[16C2]
C7601	CAP_805-2	lio[16C1]
C7602	CAP_P_CASE-C2-SM	lio[16C1]
C7603	CAP_402	lio[16C3]
C7610	CAP_402	lio[16A7]
C7620	CAP_603	lio[16C6]
C7621	CAP_402	lio[16C7]
C7622	CAP_603	lio[16B5]
C7623	CAP_603	lio[16B5]
C7624	CAP_402	lio[16B4]
C7625	CAP_P_CASE-D2-LF	lio[16C3]
C7650	CAP_603	lio[16B2]
C7651	CAP_603	lio[16B1]
C7652	CAP_P_CASE-C2-SM	lio[16B1]
C7653	CAP_402	lio[16B3]
C7660	CAP_402	lio[16A3]
C7900	CAP_402	lio[17C6]
C7901	CAP_402	lio[17D6]
C7902	CAP_402	lio[17C6]
C7903	CAP_603	lio[17C4]
C7904	CAP_402	lio[17D4]
C7905	CAP_P_CASE-D2-LF	lio[17D2]
C7906	CAP_P_CASE-D2-LF	lio[17D2]
C7907	CAP_603	lio[17D6]
C7908	CAP_P_CASE-D2-LF	lio[17C2]
C7910	CAP_603	lio[17C1]
C7911	CAP_402	lio[17D5]
C7912	CAP_402	lio[17D4]
C7915	CAP_402	lio[17C6]
C7916	CAP_805	lio[17D3]
C7917	CAP_805	lio[17D2]
C7920	CAP_402	lio[17B5]
C7921	CAP_402	lio[17B5]
C7922	CAP_402	lio[17B5]
C7924	CAP_402	lio[17A4]
C7925	CAP_402	lio[17B4]
C7927	CAP_402	lio[17B1]
C7930	CAP_402	lio[17A1]
C7940	CAP_603	lio[17D7]
C7941	CAP_402	lio[17C7]
C7950	CAP_603	lio[17B6]
C7951	CAP_603	lio[17B4]
C7961	CAP_402	lio[17A7]
C7962	CAP_402	lio[17A7]
C7970	CAP_603	lio[17C4]
C7971	CAP_402	lio[17A2]
C7980	CAP_402	lio[17B7]
C7990	CAP_402	lio[17C6]
C9800	CAP_402	lio[19D7]
C9820	CAP_402	lio[19C5]
C9821	CAP_402	lio[19D4]
C9822	CAP_603-1	lio[19C4]
C9830	CAP_603	lio[19C5]
C9832	CAP_402	lio[19B6]
C9840	CAP_402	lio[19A5]
C9845	CAP_402	lio[19A4]
C9850	CAP_402	lio[19A3]
C9855	CAP_402	lio[19C3]
C9900	CAP_805	lio[20C6]
C9910	CAP_402	lio[20C6]
C9913	CAP_402-LF	lio[20B7]
C9914	CAP_402	lio[20B7]
C9915	CAP_603	lio[20B7]
C9916	CAP_402	lio[20B6]
C9918	CAP_603-1	lio[20B6]
C9919	CAP_402	lio[20B6]
C9922	CAP_402	lio[20B4]
C9923	CAP_402	lio[20B4]
C9924	CAP_402	lio[20B3]
C9925	CAP_402	lio[20B3]
C9932	CAP_402	lio[20B2]
C9950	CAP_1210	lio[20D4]
C9991	CAP_402	lio[20C2]
C9992	CAP_402	lio[20C2]
C9993	CAP_402	lio[20B2]
C9994	CAP_402	lio[20B2]
D4600	DIODE_SCHOT_3P_A_SC-75	lio[8B3]
D6900	RCLAMP2402B_SC-75	lio[15C7]
D6901	DIODE_SOD-323	lio[15D5]
D7900	DIODE_SCHOT_SOD-123	lio[17C3]
D7903	ZENER_SOT23	lio[17C4]
D7921	DIODE_SOD-323	lio[17B3]
D7940	DIODE_3P_CA_SOT-523-3	lio[17D7]
D7950	DIODE_3P_C1_SOT-323	lio[17B5]
D9825	DIODE_3P_A1_SC81	lio[19D3]
D9835	DIODE_SOD-523	lio[19B4]
D9845	DIODE_SOD-523	lio[19A4]
D9850	DPAK3P_DIODE_SOT-363	lio[19B4 19B2 19B2]
D9930	DPAK3P_DIODE_SOT-363	lio[19A6]
D9930	DPAK3P_DIODE_SOT-363	lio[20B3 20B3]
DZ6702	SUPPR_TRANSIENT1_402	lio[13C5]
DZ6703	SUPPR_TRANSIENT1_402	lio[13C5]
DZ6704	SUPPR_TRANSIENT1_402	lio[13C5]
DZ6706	SUPPR_TRANSIENT1_402	lio[13C6]
DZ6752	SUPPR_TRANSIENT1_402	lio[13A6]
DZ6753	SUPPR_TRANSIENT1_402	lio[13A5]
DZ6754	SUPPR_TRANSIENT1_402	lio[13A5]
DZ6755	SUPPR_TRANSIENT1_402	lio[13A5]
F6900	FUSE_1206	lio[15D5]
F7902	FUSE_1206	lio[17B2]
F9900	FUSE_603-LF	lio[20D7]
FL3600	FILTER_4P_1210-4SM1	lio[7C3]
FL3601	FILTER_4P_1210-4SM1	lio[7B3]
J3400	CON_F52RT_D2MT_SM_F-ST-SM	lio[5C5]
J3500	CON_F26RT_S4MT_SM_M75_F-RT-SM	lio[6D2]
J3600	CON_M80ST_D4MT_SM_M-ST-SM	lio[7C4]
J4600	CON_F4RT_USB_S2MT_TH_F-RT-TH-USB-LFT	lio[8C2]
J6700	CON_F8RT_SPDIFTRAN_TH2_F-RT-TH	lio[13D8]
J6750	CON_F8RT_SPDIFRCVR_TH2_F-RT-TH	lio[13B8]
J6780	CON_M8ST_S_TH_M-ST-TH	lio[13C1]
J6900	CON_F5RT_S2MT_TH3_F-RT-TH-MG3	lio[15D8]
J6915	CON_M12ST_S_SM_M-ST-SM	lio[15A4]
J9050	CON_F5ST_S2MT_SM_F-ST-SM	lio[18C5]
L3400	FILTER_4P_1210-4SM1	lio[5B2]
L4600	FILTER_4P_1210-4SM1	lio[8C4]
L4601	IND_0603	lio[8C4]
L6200	IND_0402	lio[10A6]
L6201	IND_0402	lio[10D7]
L6202	IND_0402	lio[10D4]
L6500	IND_0402	lio[11D6]
L6501	IND_0402	lio[11C6]
L6601	IND_0402	lio[12C7]
L6610	IND_0402	lio[12C7]
L6620	IND_0402	lio[12A7]
L6701	IND_0603-LF	lio[13D4]
L6704	IND_0402	lio[13C4]
L6706	IND_0402	lio[13C4]
L6751	IND_0402	lio[13B4]
L6754	IND_0402	lio[13B4]
L6756	IND_0402	lio[13B4]
L6758	IND_0402	lio[13A4]
L6800	IND_0402	lio[14A4]
L6900	FILTER_4P_SM	lio[15D6]
L6901	IND_SM-1	lio[15D6]
L7600	IND_IHLP	lio[16C2]
L7650	IND_IHLP	lio[16B2]
L7900	IND_3P_FDA1254-SM	lio[17C2]
L9950	IND_IHLP2525CZ-SM	lio[20D3]
L9991	IND_0402-LF	lio[20C2]
L9992	IND_0402-LF	lio[20C2]
L9993	IND_0402-LF	lio[20C2]
L9994	IND_0402-LF	lio[20B2]
Q3450	TRA_SINGLE_MOSFET_PCHN_SOT-23	lio[5D2]
Q6800	TRA_DUAL_SSM6N15FE_SOT563	lio[14B7 14C6]
Q6801	TRA_DUAL_SSM6N15FE_SOT563	lio[14C5 14C6]
Q6802	TRA_SSM3K15FV_SOD-VESM	lio[14A6]
Q6900	TRA_DUAL_SSM6N15FE_SOT563	lio[15C1 15C3]
Q6901	TRA_DUAL_SSM6N15FE_SOT563	lio[15C1 15C2]
Q6909	TRA_DUAL_BSS84V_SOT-563	lio[15D2]
Q6910	TRA_SSM3K15FV_SOD-VESM	lio[15B4]
Q6950	TRA_SI4413ADY_SO-8	lio[15B4]
Q7600	TRA_FDMS9600S_MLP	lio[16C3]
Q7610	TRA_DUAL_PWRPK_PCHN_6P_PWRPK-1212-8	lio[16A3 16A7]
Q7650	TRA_FDMS9600S_MLP	lio[16B2]
Q7900	TRA_SI4413ADY_SO-8	lio[17D4]
Q7901	TRA_RJK_LFPAK	lio[17C3]
Q7902	TRA_RJK_LFPAK	lio[17C3]
Q7920	TRA_SI4413ADY_SO-8	lio[17B4]
Q7921	TRA_SI4413ADY_SO-8	lio[17B3]
Q7922	TRA_DUAL_SSM6N15FE_SOT563	lio[17A4 17A4]
Q7924	TRA_DUAL_SSM6N15FE_SOT563	lio[17A3 17A5]
Q7940	TRA_IRLML5203_SM	lio[17D7]
Q7950	TRA_SSM3K15FV_SOD-VESM	lio[17C7]
Q7960	TRA_DUAL_SSM6N15FE_SOT563	lio[17A7 17A8]
Q7961	TRA_DUAL_SSM6N15FE_SOT563	lio[17A7 17A8]
Q7970	TRA_SI4413ADY_SO-8	lio[17B2]
Q9805	TRA_DUAL_NPCH_NTZD3155C1_SOT-563	lio[19B7 19C7]
Q9850	TRA_UP04601_2_SSMINI6-F1	lio[19C3 19B3]
Q9905	TRA_DUAL_NPCH_NTZD3155C1_SOT-563	lio[20C6 20C8]
Q9950	TRA_DUAL_MOSFET_NPCHN3_PWRPK-1212-8	lio[20D4 20C4]
Q9960	TRA_DUAL_MOSFET_NPCHN3_PWRPK-1212-8	lio[20C4 20C4]
R3450	RES_402	lio[5C2]
R3451	RES_402	lio[5C2]
R3500	RES_402	lio[6C6]
R3561	RES_402	lio[6B3]
R6201	RES_402	lio[10B6]
R6203	RES_402	lio[10C3]
R6204	RES_402	lio[10C7]
R6205	RES_402	lio[10B6]
R6206	RES_402	lio[10B4]
R6207	RES_402	lio[10B3]
R6220	RES_402	lio[10A6]
R6221	RES_402	lio[10A4]
R6222	RES_402	lio[10A4]
R6250	RES_402	lio[10B2]
R6251	RES_402	lio[10B2]
R6500	RES_402	lio[11C5]
R6510	RES_402	lio[11B5]
R6511	RES_402	lio[11B4]
R6512	RES_402	lio[11B4]
R6513	RES_603	lio[11D3]
R6514	RES_402	lio[11C3]
R6520	RES_402	lio[11A5]
R6521	RES_402	lio[11A4]
R6522	RES_402	lio[11A4]
R6523	RES_603	lio[11C2]
R6524	RES_402	lio[11C3]
R6601	RES_402	lio[12C7]
R6602	RES_402	lio[12C4]
R6603	RES_402	lio[12C7]
R6610	RES_402	lio[12C2]
R6611	RES_402	lio[12C2]
R6620	RES_402	lio[12B2]
R6621	RES_402	lio[12B2]
R6700	RES_402	lio[13C4]
R6701	RES_402	lio[13C4]
R6720	RES_603	lio[13D6]
R6721	RES_402	lio[13D6]
R6722	RES_402	lio[13C6]
R6723	RES_402	lio[13C6]
R6724	RES_402	lio[13C6]
R6725	RES_402	lio[13B6]
R6726	RES_402	lio[13B6]
R6727	RES_402	lio[13B6]
R6728	RES_402	lio[13B6]
R6729	RES_402	lio[13A6]
R6749	RES_402	lio[13B7]
R6751	RES_402	lio[13A4]
R6780	RES_402	lio[13C2]
R6790	RES_402	lio[13B2]
R6791	RES_402	lio[13B6]
R6792	RES_402	lio[13C8]
R6793	RES_402	lio[13C8]
R6801	RES_402	lio[14C7]
R6802	RES_402	lio[14C7]
R6803	RES_402	lio[14B7]
R6805	RES_402	lio[14C5]
R6806	RES_402	lio[14C5]
R6811	RES_402	lio[14A7]
R6812	RES_402	lio[14A7]
R6813	RES_402	lio[14A6]
R6836	RES_402	lio[14B2]
R6837	RES_402	lio[14B2]
R6850	RES_402	lio[14D3]
R6851	RES_402	lio[14C3]
R6852	RES_402	lio[14C3]
R6853	RES_402	lio[14C3]
R6854	RES_402	lio[14C3]
R6855	RES_402	lio[14D3]
R6861	RES_402	lio[14B7]
R6900	RES_402	lio[15C2]
R6901	RES_402	lio[15D2]
R6902	RES_402	lio[15D5]
R6903	RES_402	lio[15C3]
R6904	RES_402	lio[15C6]
R6905	RES_402	lio[15D3]
R6907	RES_805	lio[15D4]
R6909	RES_402	lio[15D1]
R6911	RES_402	lio[15C2]
R6912	RES_402	lio[15B7]
R6913	RES_402	lio[15A7]
R6915	RES_402	lio[15A6]
R6916	RES_402	lio[15B6]
R6921	RES_402	lio[15B5]
R6950	RES_402	lio[15B4]
R6990	RES_402	lio[15C5]
R6991	RES_402	lio[15C4]
R7610	RES_402	lio[16A8]
R7620	RES_402	lio[16C5]
R7621	RES_402	lio[16C6]
R7622	RES_402	lio[16C7]
R7625	RES_402	lio[16C7]
R7660	RES_402	lio[16A4]
R7900	RES_402	lio[17D5]
R7902	RES_402	lio[17D5]
R7903	RES_402	lio[17C3]
R7904	RES_402	lio[17C1]
R7905	RES_402	lio[17D3]
R7906	RES_402	lio[17B2]
R7907	RES_0612	lio[17D3]
R7908	RES_0612	lio[17C2]
R7910	RES_402	lio[17D4]
R7920	RES_2525	lio[17B3]
R7921	RES_805	lio[17B2]
R7922	RES_402	lio[17A4]
R7923	RES_402	lio[17A4]
R7924	RES_402	lio[17C8]
R7930	RES_402	lio[17B5]
R7931	RES_402	lio[17A5]
R7940	RES_402	lio[17D7]
R7941	RES_402	lio[17C7]
R7944	RES_402	lio[17C7]
R7950	RES_402	lio[17C8]
R7952	RES_402	lio[17B5]
R7953	RES_402	lio[17B5]
R7954	RES_402	lio[17B6]
R7960	RES_402	lio[17A7]
R7962	RES_402	lio[17A7]
R7963	RES_402	lio[17A7]
R7964	RES_402	lio[17A7]
R7966	RES_402	lio[17A7]
R7967	RES_402	lio[17A7]
R7968	RES_402	lio[17B7]
R7969	RES_402	lio[17A8]
R7970	RES_603	lio[17C4]
R7971	RES_402	lio[17A2]
R7972	RES_402	lio[17A2]
R7973	RES_402	lio[17A1]
R7979	RES_402	lio[17A8]
R7992	RES_402	lio[17D5]
R9805	RES_402	lio[19C7]
R9806	RES_402	lio[19B7]
R9810	RES_402	lio[19C6]
R9811	RES_402	lio[19D5]
R9812	RES_402	lio[19D5]
R9813	RES_402	lio[19D5]
R9814	RES_402	lio[19C5]
R9820	RES_402	lio[19D5]
R9821	RES_402	lio[19C5]
R9825	RES_402	lio[19D3]
R9830	RES_402	lio[19B6]
R9831	RES_402	lio[19B6]
R9832	RES_402	lio[19B6]
R9833	RES_402	lio[19B5]
R9834	RES_603	lio[19B4]
R9835	RES_402	lio[19C4]
R9840	RES_402	lio[19B6]
R9841	RES_402	lio[19A6]
R9842	RES_402	lio[19B5]
R9843	RES_402	lio[19A5]
R9845	RES_402	lio[19B4]
R9850	RES_402	lio[19B3]
R9851	RES_402	lio[19A3]
R9853	RES_402	lio[19B3]
R9854	RES_402	lio[19C3]
R9855	RES_402	lio[19B3]
R9900	RES_402	lio[20C6]
R9905	RES_402	lio[20C7]
R9906	RES_402	lio[20C7]
R9910	RES_402	lio[20C6]
R9911	RES_402	lio[20C6]
R9912	RES_402	lio[20C5]
R9913	RES_402	lio[20B7]
R9917	RES_402	lio[20B6]
R9920	RES_402	lio[20B4]
R9921	RES_402	lio[20B4]
R9922	RES_402	lio[20B4]
R9923	RES_402	lio[20B4]
R9924	RES_402	lio[20B3]
R9925	RES_402	lio[20B3]
R9930	RES_402	lio[20B3]
R9931	RES_402	lio[20B3]
R9932	RES_402	lio[20B2]
R9950	RES_402	lio[20C4]
R9960	RES_402	lio[20C4]
U3500	PWR_CNTRL_TPS2231_QFN	lio[6C5]
U3551	MC74VHC1G00_SC70-5	lio[6A6]
U3560	MC74VHC1G00_SC70-5	lio[6B2]
U3561	SN74LVC1G04_BGA	lio[6A3]
U4600	SWI_TPS2051BDGN_MSOP	lio[8C6]
U5605	INA193_SOT23-5	lio[9C3]
U5615	INA193_SOT23-5	lio[9C6]
U5650	TMP106_WCSP-6	lio[9B5]
U6200	AUDIO_ALC885B2_LQFP	lio[10C5]
U6201	LREG_MAX1819_UCSP	lio[10A5]
U6500	MAX9724A_TQFN	lio[11D4]
U6610	MAX9705_TDFN1	lio[12C5]
U6620	MAX9705_TDFN1	lio[12B5]
U6900	TPS3808_SOT23-6	lio[15A7]
U6950	MC74VHC1G08_SC70	lio[15A5]
U6990	COMPARATOR_LM397_SOT23-5	lio[15C4]
U7600	TPS51120_LLP	lio[16C6]
U7900	ISL6257_QFN	lio[17D5]
U7901	OPAMP_OPA333_SC70-5	lio[17B8]
U7950	LREG_MAX8719_TDFN	lio[17C6]
U9800	MC74VHC1G08_SC70	lio[19D7]
U9820	TA75W393FU_SSOP	lio[19A5 19D4]
U9830	COMPARATOR_TA75S393F_SSOP-5	lio[19B4]

U9900	BD9828FV_SSOP	lio[20C5]
XW6200	SHORT_SM	lio[10A6]
XW6202	SHORT_SM	lio[10A6]
XW6500	SHORT_SM	lio[11C6]
XW6501	SHORT_SM	lio[11C5]
XW6701	SHORT_SM	lio[13A3]
XW6710	SHORT_SM	lio[13B2]
XW6711	SHORT_SM	lio[13B2]
XW6712	SHORT_SM	lio[13B2]
XW6800	SHORT_SM	lio[14C3]
XW7600	SHORT_SM	lio[16A4]
XW7601	SHORT_SM	lio[16A6]
XW7602	SHORT_SM	lio[16A6]
XW7603	SHORT_SM	lio[16A6]
XW7604	SHORT_SM	lio[16A6]
XW7605	SHORT_SM	lio[16A6]
XW7606	SHORT_SM	lio[16A6]
XW7607	SHORT_SM	lio[16B6]
XW7608	SHORT_SM	lio[16B6]
XW7609	SHORT_SM	lio[16B6]
XW7610	SHORT_SM	lio[16B6]
XW7900	SHORT_SM	lio[17C5]
XW7901	SHORT_SM	lio[17D3]
XW7902	SHORT_SM	lio[17D3]
XW7903	SHORT_SM	lio[17C2]
XW7904	SHORT_SM	lio[17C2]
XW9950	SHORT_SM	lio[20D5]
ZT0900	MTGHOLE	lio[4D3]
ZT0910	MTGHOLE	lio[4A8]
ZT0920	MTGHOLE	lio[4B8]
ZT0930	MTGHOLE	lio[4A8]